TOWNE SOUTH PLAZA
3718 US HWY 41
TERRE HAUTE, IN 47802

BWW TERRE HAUTE
CORPORATE IN-LINE
STADIA REMODEL

VENDOR CONTACT INFORMATION

VENDOR		
FLOORING		
MOHAWK CARPET	ERICA WELLS	800.622.6228 X 24747
RBC TILE AND STONE	MARGIE YUREK / SUE COOPER	763.559.5531
HARDWARE		
TWIN CITY HARDWARE	BRENT CHUHEL	651.731.7126
INTERIOR FINISH MATERIAL		
NICHIHA, INC.	BRAD SPEERS BSPEERS@NICHIHA.COM	678.779.1371
NICHIHA, INC.	MATT STEPHENSON MSTEPHENSON@NICHIHA.COM	707.789.8228
EQUIPMENT		
WASSERSTROM	BRAD WEAVER	614.735.2420
LIGHTING		
ONSITE LIGHTING	MIKE GLEESON MIKE.GLEESON@ONSITELIGHTING.COM	763.682.7122
TOTO FAUCETS		
HJC INC.	TRISH ALLISON OR HALEY GREEN BWW@HJCINC.COM	800.459.7099

* G.C. MUST INCLUDE G.C. FURNISHED ITEMS IN THEIR BID TO OWNER

PROJECT RESPONSIBILITY MATRIX

NOTE: GENERAL CONTRACTOR TO ASSUME ALL ITEMS NOT INDICATED ON RESPONSIBILITY MATRIX SHALL BE FURNISH, INSTALLED AND COORDINATED BY GENERAL CONTRACTOR.

		N/A	LL	BWW F&I	BWW F Only	GC F&I	GC I Only	NOTES "F" = Furnish; "I" = Install; "O" = Installation materials & coordination / Special Instructions
01	GENERAL REQUIREMENTS							
0	Site Verification					O		–O– GC is responsible to field verify all measurements and site conditions prior to ordering anything, any discrepancies are to be brought to architect attention immediately.
A	Vendors					O		–O– Vendors are responsible to field verify all measurements and site conditions prior to fabrication.
1	Planning and Zoning			X				Meetings to be attended and drawings to be provided by Owners architect.
2	Building Permits					X		GC responsible for payment and acquisition of all required permits.
A	Plan Check Fees			X				As required
B	Inspections					X		As required by local Building Dept., Fire Dept. & Health. GC to coordinate & order all inspections. GC is responsible for obtaining a C of O by date indicated in contract
3	Temporary Utilities					X		As required
4	Clean up–Final					X		Daily cleaning w/ FINAL cleaning of all floors, walls, exposed structure, light fixtures, glass, kitchen equip. prior to turn over.
5	Project Supervision					X		Full time on site project supervisor.
6	Insurance					X		As required by Developer & Owner. – GC to furnish General liability, auto, Worker's comp. & Builders risk.
7	Flooring Protection					X		Protection for floor finishes after installation.
8	Close out Package					X		Provide C of O and C of C, two copies of As–Builts, Operational Manuals, Warranties and Final Lien Waivers.
9	Storage Container					X		GC to provide one 40' steel storage container and one refrigerated truck for cold storage as applicable. Coordinate with BWW, LL onsite Rep and Local Authorities for location.
10	Dumpster					X		Coordinate with BWW, LL onsite Rep and Local Authorities for size and location.
02	SITE WORK							
1	Site Paving	X						
2	Curbs & Sidewalks					X		Patch and Repair existing Per plans
03	CONCRETE WORK							
1	Concrete slab					X		Existing to remain, patch and repair as necessary.
2	Concrete curbs and curb ramps	X						
3	Concrete walks					X		Powerwash per plan
05	METALS							
1	Metal Stud Interior walls					X		Metal studs at 16" o.c. per plan designation.
2	Metal furring					X		2 1/2" and/ 1 5/8" metal studs per plan
3	Wall standards					X		Heavy duty wall standards & shelf brackets per plans
4	Stainless Steel Wall Panels					X		Wall panels per plans, verify all dimensions in the field, refer to interior elevations.
5	Posts					X		Steel posts for partial height wall
6	Stainless Steel Corner Guards/End Caps					X		Stainless wall corner guards and end caps per plans.
06	WOOD & PLASTICS							
1	Takeout counter			X			X	Solid Surface counter & laminate cabinets – GC to verify all dimensions and coordinate with millwork vendor and install millwork.
2	Wood trim			X			X	Prefinished White Maple – GC to verify all dimensions and provide approved millwork vendor with running lengths to supply bid. GC to install.
3	Front/back bar counters and cabinet doors			X			X	Solid surface counter and replacement laminate cabinets doors – GC to verify all dimensions and coordinate with millwork vendor and install millwork.
4	Wait station cabinetry			X			X	Solid Surface counter & laminate cabinets – GC to verify all dimensions and coordinate with millwork vendor and install millwork.
5	Restroom vanities			X			X	Solid Surface counter & laminate millwork – GC to verify all dimensions and coordinate with millwork vendor and install millwork.
6	Liquor step displays			X			X	GC to verify all dimensions and coordinate with millwork vendor and install millwork.
7	Wall hung upper cabinets			X			X	Laminate cabinets per plan – GC to verify all dimensions and coordinate with millwork vendor and install millwork.
8	Hostess Stand			X			X	
07	THERMAL MOISTURE							
1	Membrane Roofing & Flashing					X		As indicated on drawings and manufacturer's details & specifications., GC to flash new construction to existing construction.
2	Sealants					X		As required but not limited to building exterior, kitchen equipment, casework, trim work & tile work.
08	OPENINGS							
1	Doors & frames					X		As indicated on Architectural drawings.
A	Hardware					X		GC is responsible for site verification and fixing all existing hardware to remain, refer to Architectural drawings for replacement of hardware.
09	FINISHES							
1	Wainscot					X	X	Install per plans– GC to provide take–off to BWW vendor. Replace gyp bd. behind as required.
2	FRP wall panels						X	Fiberglass reinforced panels smooth finish, white – in kitchen, storage, and closets – black in bar and server stations, provide, repair/replace per plan. Verify conditions in the field.
3	Paint and Stain						X	Structure, deck, ductwork, conduits, diffusers, walls, doors & frames (interior & exterior)
4	Cypsum board						X	5/8" gypsum wallboard– tape and sand exposed surfaces & ready for finishes. Patch and repair all cracks prior to new finish. See plans.
5	Flooring and Base						X	(Includes tile and carpet) GC to contact BWW approved flooring vendor for bid. GC to provide take off to vendor.
6	Lay–In Ceiling Tiles						X	As indicated on Architectural drawings.
7	Sealed Concrete						X	As indicated on Architectural drawings.
8	Corian					X	X	All millwork tops and bartops.
9	Fiber Cement Panels – Nichiha system						X	Per Arch Plans
10	SPECIALTIES							
1	Instructional Signage						X	Miscellaneous signage required by local code including, but not limited to Restroom, Occupancy, Handwash, Building Address etc.
11	EQUIPMENT							
1	Exterior signage			X			X	BWW vendor is responsible for all approval/permits/installation and removal / reinstallation of items Including but not limited to wall signage, parking signage, and monument/pylon sign under separate cover. GC responsible for fire retardant blocking and electrical connections, and work indicated on Electrical drawings.
2	Interior illuminated signage			X			O	O – GC responsible for fire retardant blocking and work indicated on Electrical drawings.
3	Audio / visual equipment			X			O	O – GC responsible for receptacle, wiring and conduits refer to Electrical drawings for information.
4	Registers/printers			X		O		O – GC responsible for receptacle and conduits refer to Electrical drawings for information. Termination by owner's vendor. Refer to drawings for scope of new work.
5	Kitchen Equipment–New			X		X		BWW Vendor to provide and install equipment. GC to provide power and water as indicated on drawings and make final connections.
6	Kitchen Equipment–Existing to Relocate					X		GC to relocate existing equipment, provide power and water as indicated on drawings and make final connections.
12	FURNISHINGS							
1	Bar Area Foot Rest				X		X	GC to unpack, assemble and anchor per Architectural drawings and manufacturer's specifications.
2	Mirrors					X		As indicated on Architectural drawings. (2) 24x36 in each restroom and (1) 24X72 mirror in women's restroom.
3	Seating area tables, chairs & booths				X		X	GC to unpack, assemble and anchor per Architectural drawings and manufacturer's specifications.
22	PLUMBING							
1	Water					X		Tie to existing systems as indicated on drawings. All work necessary to complete scope of remodel.
2	Waste					X		Tie to existing systems as indicated on drawings. All work necessary to complete scope of remodel.
3	Vent					X		Tie to existing systems as indicated on drawings. All work necessary to complete scope of remodel.
4	Modification of Existing System					X		Modify existing system components as indicated on drawings. All work necessary to complete scope of remodel.
5	Water Filter					X		GC to provide water stub to filter location and install PVC chase. Refer to MP100 for further information.
23	MECHANICAL							
1	Modification of Existing System					X		Modify existing system components as indicated on drawings. All work necessary to complete scope of remodel. Add 24x24 black egg crate return in vestibule only if lay–in ceiling.
2	Sprinkler system					X		Modify system to meet local codes per new layout. Provide design/build under separate cover.
26	ELECTRICAL							
1	Distribution System					X		Tie to existing system as indicated on electrical drawings
2	Panels / transformers					X		Tie to existing system as indicated on electrical drawings
3	Light fixtures & lamps					X		As indicated on Electrical drawings and specifications. Contact BWW approved lighting vendor for bid. Refer to for vendor contacts.
4	Fire Life Safety Alarms			X		X		Furnish/Modify system to meet local codes. Provide design/build under separate cover, verify working condition prior to shutdown.

ORIGINAL PRINT SIZE – 30 X 42

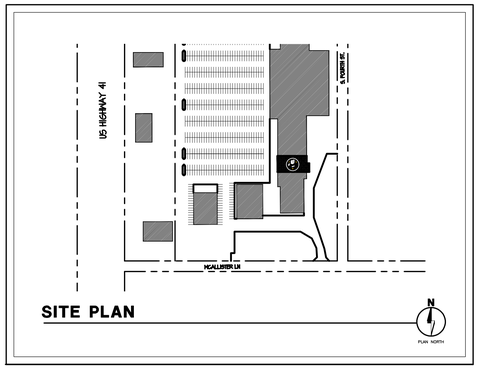

SITE PLAN

VICINITY MAP

PROJECT CONTACT INFO

TENANT REPRESENTATIVE:
ERIC TRUSKOSKI
BUFFALO WILD WINGS, INC.
5500 WAYZATA BLVD. SUITE 1600
MINNEAPOLIS, MN 55416
ETRUSKOSKI@BUFFALOWILDWINGS.COM

ARCHITECT:
INTERTECH DESIGN SERVICES, INC.
ZSOLT S. VAMOSI, RA.
9675 MONTGOMERY RD.
CINCINNATI, OH 45242
PHONE: (513) 791–5588
FAX: (513) 792–7923

BUILDING DEPARTMENT:
CITY OF TERRE HAUTE – DEPARTMENT OF BUILDING PERMITS
17 HARDING AVE, ROOM 203
TERRE HAUTE, IN 47807
PHONE: (812) 232–5823

PROJECT MANAGER:
AMY GREEN
INTERTECH DESIGN SERVICES, INC.
9675 MONTGOMERY RD.
CINCINNATI, OH 45242
PHONE: (513) 791–5588
FAX: (513) 792–7923
AGREEN@INTERTECHDESIGN.NET

MP & E ENGINEER:
INTERTECH DESIGN SERVICES, INC.
STEPHEN J. VAMOSI, PE.
9675 MONTGOMERY RD.
CINCINNATI, OH 45242
PHONE: (513) 791–5588
FAX: (513) 792–7923

HEALTH DEPARTMENT:
VIGO COUNTY DEPARTMENT OF ENVIRONMENTAL HEALTH
COUNTY ANNEX BUILDING
147 OAK STREET
TERRE HAUTE, IN 47807
PHONE: (812) 462–3281

LANDLORD/DEVELOPER:
SANSONE TOWNE SOUTH PLAZA, LLC
SANSONE GROUP
120 S. CENTRAL AVE, SUITE 500
SAINT LOUIS, MO 63105
PHONE: (314) 727–6664
CONTACT: SHARON LITTEKEN

STATE DEPARTMENT:
INDIANA DEPARTMENT OF FIRE AND BUILDING SERVICES OFFICE OF THE STATE BUILDING COMMISSIONER
402 W. WASHINGTON ST, ROOM E245
INDIANAPOLIS, IN 46204
800 423–0765

NOTICE TO BIDDERS

THE "GENERAL CONTRACTOR," ITS "SUBCONTRACTORS," AND "VENDORS" SHALL REVIEW THE PROPOSED SITE FOR BIDDING PURPOSES AND TO FAMILIARIZE THEMSELVES WITH THE EXISTING CONDITIONS OF THE SITE AND PROPOSED SPACE. ANY DISCREPANCIES BETWEEN THE CONSTRUCTION DOCUMENTS (DRAWINGS AND PROJECT MANUAL) AND EXISTING CONDITIONS SHALL BE SUBMITTED IN WRITING TO THE "ARCHITECT" AND OWNER BY THE "GENERAL CONTRACTOR" FOR CLARIFICATION. BY FAILURE TO CLARIFY DISCREPANCIES, GC SHALL BEAR RISK AND COST, AT NO CHARGE TO OWNER TO RECTIFY.

GC AND VENDOR TO CHECK WEBSITE AND CALL/EMAIL ARCHITECT IN REGARDS TO MOST RECENT DRAWINGS BEFORE ORDERING, MANUFACTURING, AND GOING TO SITE.
IN AS MUCH AS THE ADAPTATION OF AN EXISTING STRUCTURE REQUIRES THAT CERTAIN ASSUMPTIONS BE MADE REGARDING EXISTING CONDITIONS, AND BECAUSE SOME OF THESE ASSUMPTIONS MAY NOT BE VERIFIABLE WITHOUT EXPENDING ADDITIONAL SUMS OF MONEY OR DESTROYING OTHERWISE ADEQUATE SERVICEABLE PORTIONS OF THE STRUCTURE, THE CLIENT AGREES TO HOLD HARMLESS AND INDEMNIFY DESIGN PROFESSIONALS FOR ALL CLAIMS, COSTS, LOSSES, AND EXPENSES ARISING OR ALLEGEDLY ARISING FROM THE DISCOVERY OF CONCEALED OR UNKNOWN CONDITIONS IN THE EXISTING STRUCTURE OR FROM ANY DEFICIENCIES OR INACCURACIES IN ANY INFORMATION OR DOCUMENTATION FURNISHED TO THE DESIGN PROFESSIONAL BY THE CLIENT, AND TO PAY DESIGN PROFESSIONALS FOR ADDITIONAL SERVICES RESULTING THEREFROM. (FOR REMODELS OR CONVERSIONS ONLY– NOT NEW BUILDS)

GENERAL NOTES

1. CONTRACTOR SHALL NOTIFY THE OWNER IMMEDIATELY OF DISCREPANCIES FOUND ON THE DRAWINGS, OR ANY EXISTING CONDITIONS FOUND ON SITE, WHICH CONFLICT WITH THE CONTRACT DOCUMENTS. THE CONTRACTOR IS TO CLARIFY ANY SUCH DISCREPANCIES WITH THE OWNER PRIOR TO COMMENCING WORK.
2. DRAWINGS ARE NOT TO BE SCALED. DIMENSIONS INDICATED ON DRAWINGS TAKE PRECEDENCE. LARGER SCALE DRAWINGS TAKE PRECEDENCE OVER SMALLER SCALE DRAWINGS.
3. ALL CONSTRUCTION SHALL COMPLY WITH APPLICABLE BUILDING CODES AND LOCAL RESTRICTIONS. CONTRACTORS MUST COMPLY WITH CONTRACTOR REGISTRATION REQUIREMENTS OF ALL GOVERNING AUTHORITIES.
4. APPROVED PLANS SHALL BE KEPT IN A PLAN BOX AND SHALL NOT BE USED BY WORKMEN. ALL CONSTRUCTION SETS SHALL BE CURRENT INCLUDING ALL CHANGES AND THEY SHALL REFLECT THE SAME INFORMATION. THE CONTRACTOR SHALL INDICATE ON THESE PLANS ALL APPROVED CHANGES TO THE WORK. THIS SET OF DRAWINGS SHALL BE TURNED OVER TO THE OWNER WHEN THE PROJECT IS COMPLETE. CONTRACTOR SHALL MAINTAIN ONE COMPLETE SET OF PLANS ON THE PREMISES IN GOOD CONDITION AT ALL TIMES. THIS SHALL INCLUDE ALL ADDENDA.
5. THE CONTRACTOR SHALL FIELD VERIFY ALL CONDITIONS AND DIMENSIONS PRIOR TO STARTING ANY WORK AND SHALL BE RESPONSIBLE FOR ALL WORK AND MATERIALS INCLUDING THOSE FURNISHED BY SUBCONTRACTORS AND OWNER.
6. IT SHALL BE THE RESPONSIBILITY OF THE CONTRACTOR TO LOCATE ALL EXISTING UTILITIES WHETHER SHOWN HEREIN OR NOT AND TO PROTECT THEM FROM DAMAGE. THE CONTRACTOR SHALL BEAR THE EXPENSE OF REPAIR OR REPLACEMENT OF UTILITIES OR OTHER PROPERTY DAMAGED BY OPERATIONS IN CONJUNCTION WITH THE EXECUTION OF THE WORK AFTER SO LOCATED.
7. FOR CONSTRUCTION DETAILS NOT SHOWN, USE THE MANUFACTURER'S APPROVED SHOP DRAWINGS / DATA SHEETS IN ACCORDANCE WITH THE PROJECT SPECIFICATIONS.
8. PROVIDE SOLID WOOD BLOCKING IN STUD WALLS AS REQUIRED TO SUPPORT WALL MOUNTED FIXTURES, FURNISHINGS & EQUIPMENT.
9. ALL CONCEALED INSULATION SHALL HAVE A FLAME SPREAD RATING OF 25 OR LESS AND A SMOKE DEVELOPED RATING OF 450 OR LESS IN ACCORDANCE WITH ASTM E84.
10. DOORS INDICATED ON THE PLAN SHALL BE LOCATED A MINIMUM OF 4" FROM ADJACENT WALLS UNLESS NOTED OR DIMENSIONED OTHERWISE, OR AS REQUIRED FOR HARDWARE INSTALLATION.
11. EXIT HARDWARE SHALL ALLOW FOR EGRESS AT ALL TIMES WITHOUT THE USE OF SPECIAL KNOWLEDGE OR EFFORT.
12. THE ARCHITECT SHALL NOT BE RESPONSIBLE FOR THE MEANS, METHODS, TECHNIQUES, SEQUENCES OR PROCEDURES OF CONSTRUCTION SELECTED BY CONTRACTOR.
13. THE CONTRACTOR WILL BE SOLELY AND COMPLETELY RESPONSIBLE FOR CONDITIONS OF THE JOB SITE INCLUDING SAFETY OF ALL PERSONS AND PROPERTY DURING PERFORMANCE OF THE WORK. THIS REQUIREMENT WILL APPLY CONTINUOUSLY AND NOT BE LIMITED TO NORMAL WORKING HOURS.
14. FIRESTOPPING OF TWO INCH NOMINAL LUMBER SHALL BE PROVIDED TO FORM AN EFFECTIVE FIRE BARRIER BETWEEN ALL CONCEALED DRAFT OPENINGS, BOTH VERTICAL AND HORIZONTAL.
15. STRUCTURAL LUMBER EXPOSED TO THE EXTERIOR OR IN CONTACT WITH THE CONCRETE OR MASONRY SHALL BE PRESSURE TREATED.
16. ALL WORK SHALL COMPLY WITH FEDERAL ANSI REQUIREMENTS.
17. FIRE SPRINKLER PLANS SHALL BE SUBMITTED BY THE FIRE PROTECTION CONTRACTOR FOR REVIEW PER NFPA 13.
18. FIRE ALARM PLANS SHALL BE SUBMITTED BY THE FIRE PROTECTION CONTRACTOR FOR REVIEW PER NFPA 72.
19. THE AUTOMATIC FIRE EXTINGUISHING SYSTEM FOR THE COMMERCIAL COOKING APPLIANCES SHALL BE INSTALLED PER NFPA 96.
20. MANUFACTURER SPECIFICATIONS SHOULD TAKE PRECEDENCE OVER DRAWINGS. GC IS RESPONSIBLE TO GIVE SUBCONTRACTORS ALL REQUIRED SPECIFICATIONS PRIOR TO BID.
21. ALL MATERIALS, FINISHES AND SPECIFICATIONS MUST BE BUFFALO WILD WINGS STANDARDS. NO ALTERNATES OR SUBSTITUTIONS ARE ACCEPTED WITHOUT WRITTEN APPROVAL FROM BUFFALO WILD WINGS CONSTRUCTION DEPARTMENT.
22. G.C. SHALL REFER TO GENERAL NOTES ON EACH DRAWING SHEET AND INCORPORATE AS A PART OF WORK RESPONSIBILITY.
23. THE CONTRACTOR IS RESPONSIBLE FOR ALL COORDINATION BETWEEN SUBCONTRACTORS BASED ON THE ENTIRE SET OF THESE DOCUMENTS. NO EXTRA COMPENSATION WILL BE GIVEN TO A BIDDER OR SUPPLIER WHO HAS BID FROM AN INCOMPLETE SET OF CONSTRUCTION DOCUMENTS. IN CASE OF INCONSISTENCIES OR DISCREPANCIES BETWEEN DRAWINGS THE MOST STRINGENT NOTE OR CONDITION SHALL APPLY. THE G.C. SHALL FURNISH ONE EMPTY DUMPSTER AT STORE TURNOVER TO OWNER FOR STORE'S DISPOSAL OF CARDBOARDS, TRASH, ETC.
24. DUCTWORK AND PIPING SHALL NOT BE ROUTED OVER ELECTRIC PANELS OR TRANSFORMERS.
25. IT IS THE RESPONSIBILITY OF THE CONTRACTOR TO FIELD VERIFY EXISTING SITE CONDITIONS AND DIMENSIONS PRIOR TO BIDDING. THE CONTRACTOR SHALL NOTIFY THE CONSTRUCTION MANAGER IMMEDIATELY OF ANY DISCREPANCIES. SUBMISSION OF A BID SHALL CONSTITUTE AN ACKNOWLEDGMENT AND ACCEPTANCE OF ALL EXISTING CONDITIONS. (FOR REMODELS OR CONVERSIONS ONLY– NOT NEW BUILDS)

INDEX OF DRAWINGS

KEY
● ISSUED
△ REVISED AND REISSUED

			11/25/15	12/22/15
			70% CLIENT CHECKSET	BID AND PERMIT
GENERAL	G001	COVER SHEET	●	●
	G002	GENERAL NOTES	●	●
ARCHITECTURAL	D100	DEMOLITION PLAN	●	●
	A100	DEMOLITION AND EXTERIOR ELEVATIONS	●	●
	A200	CONSTRUCTION PLAN	●	●
	A201	ENLARGED PLANS AND ELEVATIONS	●	●
	A400	FINISH PLAN	●	●
	A401	MISCELLANEOUS INTERIOR DETAILS	●	●
	A600	INTERIOR ELEVATIONS	●	●
	A700	ENLARGED RESTROOM PLAN AND ELEVATIONS	●	●
	A703	MILLWORK DETAILS	●	●
MECH	EQ–1	EQUIPMENT PLAN	●	●
	EQ–2	EQUIPMENT AND FINISH SCHEDULES	●	●
	MP100	MECHANICAL & PLUMBING PLAN	●	●
ELECT	E100	POWER AND LIGHTING PLAN	●	●
	E200	PANEL SCHEDULES AND DETAILS	●	●

SCOPE OF WORK

REMODEL OF EXISTING BUFFALO WILD WINGS RESTAURANT. NEW FURNITURE AND FINISHES IN PATRON AREAS. CONSTRUCTION SCOPE INCLUDES NEW PARTIAL HEIGHT WALL CONSTRUCTION IN DINING, UPGRADE OF EXISTING SERVER STATIONS, MODIFICATION OF TAKE OUT AREA, REPLACEMENT COUNTERTOPS AT BAR AREAS, NEW DISH MACHINE AND HAND SINK IN KITCHEN, MINOR RESTROOM UPGRADES. EXTERIOR SCOPE TO INCLUDE FINISH REFRESH, AND SIGNAGE REPLACEMENT.

CODE ANALYSIS

APPLICABLE CODES

BUILDING:	2012 INDIANA BUILDING CODE
PLUMBING:	2012 INDIANA PLUMBING CODE
MECHANICAL:	2014 INDIANA MECHANICAL CODE
ELECTRIC:	2009 INDIANA ELECTRICAL CODE
ACCESSIBILITY:	2009 ANSI 117.1
ENERGY :	2010 INDIANA ENERGY CONSERVATION CODE
FIRE:	2014 INDIANA FIRE CODE

OCCUPANCY TYPE
A–2 SMALL ASSEMBLY
BUILDING HEIGHT – 1 STORY

CONSTRUCTION TYPE
TYPE II–B – FULLY SPRINKLERED
BUILDING OCCUPANCY – 289 PERSONS (NO CHANGE)

AREA CALCULATIONS:
GROSS SQUARE FOOTAGE 5,872 SQ FT
(INCLUDING COOLERS)
PATIO (SLAB) 954 SQ FT

SEAT COUNTS:
EXISTING INTERIOR SEAT COUNT 266
EXISTING PATIO SEAT COUNT 56

PROPOSED INTERIOR SEATS 261
EXISTING PATIO SEAT COUNT 56

Intertech Design Services, Inc.
Architecture and Engineering
9675 Montgomery Rd.
Cincinnati, Ohio 45242
Phone: (513) 791–5588
Fax: (513) 792–7923
Web: www.intertechdesign.net

INTERTECH DESIGN SERVICES, INC. HAS EXERCISED REASONABLE SKILL AND JUDGMENT IN PROVIDING PROFESSIONAL SERVICES. INTERTECH DESIGN SERVICES, INC. IS NOT A GUARANTOR OF THE PROJECT TO WHICH ITS SERVICES ARE DIRECTED, AND ITS RESPONSIBILITY IS LIMITED TO WORK SPECIFICALLY PERFORMED FOR THE CLIENT. OWNERSHIP OF THE CLIENT'S SITE THEREFORE IS NOT UNDER THE DIRECT CONTROL OF INTERTECH DESIGN SERVICES, INC.

THIS DOCUMENT, AND THE IDEAS AND DESIGNS INCORPORATED HEREIN, AS AN INSTRUMENT OF PROFESSIONAL SERVICE, IS THE PROPERTY OF INTERTECH DESIGN SERVICES, INC. AND IS NOT TO BE USED, IN WHOLE OR IN PART, FOR ANY OTHER PROJECT, WITHOUT THE WRITTEN AUTHORIZATION OF INTERTECH DESIGN SERVICES, INC. ANY UNAUTHORIZED USE OF INTERTECH DESIGN SERVICES, INC. ALL RIGHTS RESERVED.

© COPYRIGHT INTERTECH DESIGN SERVICES, INC. 2015

BUFFALO WILD WINGS
CORPORATE – IN–LINE
TOWNE SOUTH PLAZA
3718 US HWY 41
TERRE HAUTE, IN 47802

DRAWING ISSUE

NO	DESCRIPTION	DATE
	70% CLIENT CHECKSET	11/25/15
	BID AND PERMIT	12/22/15

STAMP

12.22.2015

COVER SHEET
SCALE: NONE
Drawn By: GTW Checked: ARG

PROJECT NUMBER
15–0124

SHEET NUMBER
G001

SYMBOL LEGEND

ROOM / SPACE DESIGNATION	000 ROOM NAME — ROOM NUMBER; ROOM NAME	WALL FINISH TAG	F- XX
ELEVATION HEIGHT	0'-0" FINISHED FLOOR — HEIGHT; REFERENCE POINT	FINISH TAG	XX
ELEVATION DESIGNATION	01/AXXX — ELEVATION OR DETAIL; SHEET NUMBER; DIRECTION OF VIEW	WALL TYPE TAG	X
BUILDING / WALL SECTION DESIGNATION	01/AXXX — ELEVATION OR DETAIL; SHEET NUMBER; DIRECTION OF VIEW	EQUIPMENT TAG	#
ENLARGED PLAN DETAIL DESIGNATION	01/AXXX — AREA ENLARGED; SHEET NUMBER; DETAIL NUMBER	MILLWORK TAG	#
REVISION DESIGNATION	1 — REVISION NUMBER; AREA REVISED	FURNITURE TAG	#
DOOR NUMBER	02	ACCESSORY TAG	#
		KEYNOTE DESIGNATION	4
		WINDOW DESIGNATION	A

ABBREVIATIONS

@	AT	EA	EACH	LAV	LAVATORY	RES	RESILIENT
		EIFS	EXTERIOR INSULATION AND FINISH SYSTEM	LL	LANDLORD, LEASE LINE	REV	REVISION
AFF	ABOVE, FINISH FLOOR			LIN	LINEAR	R	RISER
AP	ACCESS PANEL	ELEC	ELECTRIC(AL)	LTG	LIGHTING	RD	ROOF DRAIN
ACC	ACCESSIBLE	EQ	EQUAL			RM	ROOM
ACT	ACOUSTICAL TILE	EQUIP	EQUIPMENT	MAS	MASONRY	RO	ROUGH OPENING
ADH	ADHESIVE	EWC	ELECTRIC WATER COOLER	MATL	MATERIAL	RB	RUBBER BASE
ADJ	ADJUSTABLE, ADJACENT	EP	ELECTRICAL PANELBOARD	MAX	MAXIMUM		
AHJ	AUTHORITY HAVING JURISDICTION	EXG	EXISTING	MECH	MECHANICAL	SCHED	SCHEDULE
AL	ALUMINUM	EXP	EXPANSION	MDF	MEDIUM DENSITY FIBERBOARD	SECT	SECTION
APPD	APPROVED, APPROVAL	EJ	EXPANSION JOINT	MTL	METAL	SHT	SHEET
APPROX	APPROXIMATE	EXT	EXTERIOR	MEZZ	MEZZANINE	SIM	SIMILAR
ARCH	ARCHITECTURAL			MFR	MANUFACTURER	SIM OPP	SIMILAR, OPPOSITE HAND
ACM	ASBESTOS CONTAINING MATERIAL	FIN	FINISH	MIN	MINIMUM	SWB	SLOTTED WALL BOARD
		FF	FINISHED FLOOR	MISC	MISCELLANEOUS	SC	SOLID CORE
BM	BEAM	FE	FIRE EXTINGUISHER	MO	MASONRY OPENING	SPEC(S)	SPECIFICATION(S)
BTWN	BETWEEN	FEC	FIRE EXTINGUISHER CABINET	MTD	MOUNTED	SF	SQUARE FEET
BLKG	BLOCKING	FP	FIREPROOF, FIRE PROTECTION			SS	SOLID SURFACE
BD	BOARD	FLR	FLOOR	NOM	NOMINAL	SST/SSTL	STAINLESS STEEL
B.O.	BOTTOM OF	FD	FLOOR DRAIN	NIC	NOT IN CONTRACT	SSV	STAIN, SEAL & VARNISH
BLDG	BUILDING	FLUOR	FLUORESCENT	N.O.	NUMBER	STD	STANDARD
		FRC	FIBER REINFORCED GYPSUM	NTS	NOT TO SCALE	STL	STEEL
CPT	CARPET	FRP	FIBER REINFORCED PLASTIC			STRUCT	STRUCTURAL
CLG	CEILING	FRT	FIRE RETARDANT TREATED	O.C.	ON CENTER	SUSP	SUSPENDED
CL	CENTER LINE	FDN	FOUNDATION	OPG	OPENING		
CT	CERAMIC TILE	FURN	FURNISH	OPP	OPPOSITE	TEMP	TEMPERED, TEMPERATURE, TEMPORARY
CLR	CLEAR(ANCE)			OD	OUTSIDE DIAMETER	THK	THICK(NESS)
COL	COLUMN	GA	GAUGE	OFCI	OWNER FURNISHED/CONTRACTOR INSTALLED	T&G	TONGUE & GROOVE
CONC	CONCRETE	GC	GENERAL CONTRACTOR	OFOI	OWNER FURNISHED/OWNER INSTALLED	T.O.	TOP OF
CMU	CONCRETE MASONRY UNITS	GL	GLASS, GLAZING	O.H.	OPPOSITE HAND	T	TREAD
CONST	CONSTRUCTION	GB	GRAB BAR	OHCG	OVERHEAD COILING GRILLE	TYP	TYPICAL
CONT	CONTINUOUS	GYP BD	GYPSUM BOARD				
CJ	CONTROL JOINT			PT	PAINT	UON	UNLESS OTHERWISE NOTED
CG	CORNER GUARD	HDW	HARDWARE	PNL	PANEL		
CTLG	COUNTERFLASHING	HDWD	HARDWOOD	PBD	PARTICLE BOARD	VB	VINYL BASE
CTSK	COUNTER SINK	HT	HEIGHT	PTN	PARTITION	VCT	VINYL COMPOSITION TILE
		HDF	HIGH DENSITY FIBERBOARD	PLAM	PLASTIC LAMINATE	VWC	VINYL WALL COVERING
DEG	DEGREE	HC	HOLLOW CORE	PL	PLATE	VERT	VERTICAL
DEMO	DEMOLITION	HM	HOLLOW METAL	PLBG	PLUMBING	VIF	VERIFY IN FIELD
DTL	DETAIL	HB	HOSE BIB	PLYWD	PLYWOOD	VTR	VENT THROUGH ROOF
DIA	DIAMETER	HOR	HORIZONTAL				
DIM	DIMENSION	HR	HOUR	QTY	QUANTITY	WC	WATER CLOSET
DISP	DISPENSER			QT	QUARRY TILE	WH	WATER HEATER
DWG	DRAWING	INCAN	INCANDESCENT			WP	WATERPROOF
DF	DRINKING FOUNTAIN	ID	INSIDE DIAMETER	RAD	RADIUS	W/	WITH
DS	DOWNSPOUT	INSUL	INSULATION	REF	REFER TO	W/O	WITHOUT
		INT	INTERIOR	REQ	REQUIRED	WD	WOOD

ACCESSIBLE LOCATIONS AND MOUNTING HEIGHTS

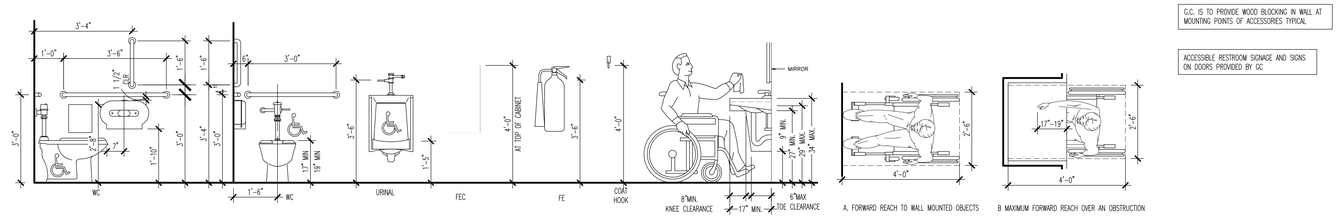

G.C. IS TO PROVIDE WOOD BLOCKING IN WALL AT MOUNTING POINTS OF ACCESSORIES TYPICAL

ACCESSIBLE RESTROOM SIGNAGE AND SIGNS ON DOORS PROVIDED BY GC.

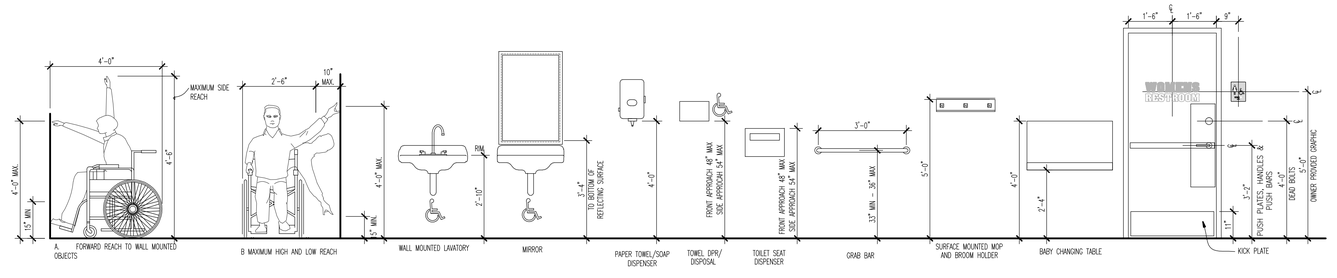

CITY COMMENTS

Intertech Design Services, Inc.
Architecture and Engineering
9675 Montgomery Rd.
Cincinnati, Ohio 45242
Phone: (513) 791-8888
Fax: (513) 792-7923
Web: www.intertechdesign.net

INTERTECH DESIGN SERVICES, INC. HAS EXERCISED REASONABLE SKILL AND JUDGMENT IN PROVIDING PROFESSIONAL SERVICES. INTERTECH DESIGN SERVICES, INC. IS NOT A GUARANTOR OF THE PROJECT TO WHICH ITS SERVICES ARE DIRECTED, AND ITS RESPONSIBILITY IS LIMITED TO WORK SPECIFICALLY PERFORMED FOR THE CLIENT. CONSTRUCTION OF THE CLIENT'S FACILITIES IS NOT UNDER THE DIRECT CONTROL OF INTERTECH DESIGN SERVICES, INC.

THIS DOCUMENT, AND THE IDEAS AND DESIGNS INCORPORATED HEREIN, AS AN INSTRUMENT OF PROFESSIONAL SERVICE, IS THE PROPERTY OF INTERTECH DESIGN SERVICES, INC. AND IS NOT TO BE USED, IN WHOLE OR IN PART, FOR ANY OTHER PROJECT, WITHOUT THE WRITTEN AUTHORIZATION OF INTERTECH DESIGN SERVICES, INC. ANY UNAUTHORIZED USE OF INTERTECH DESIGN SERVICES, INC. WILL BE PROSECUTED.

© COPYRIGHT INTERTECH DESIGN SERVICES, INC. 2015

BUFFALO WILD WINGS

CORPORATE - IN-LINE
TOWNE SOUTH PLAZA
3718 US HWY 41
TERRE HAUTE, IN 47802

DRAWING ISSUE

NO	DESCRIPTION	DATE
	70% CLIENT CHECKSET	11/25/15
	BID AND PERMIT	12/22/15

STAMP

12.22.2015

GENERAL NOTES

SCALE: NONE

Drawn By: CTW Checked: ARC

PROJECT NUMBER
15-0124

SHEET NUMBER
G002

ORIGINAL PRINT SIZE - 30 X 42

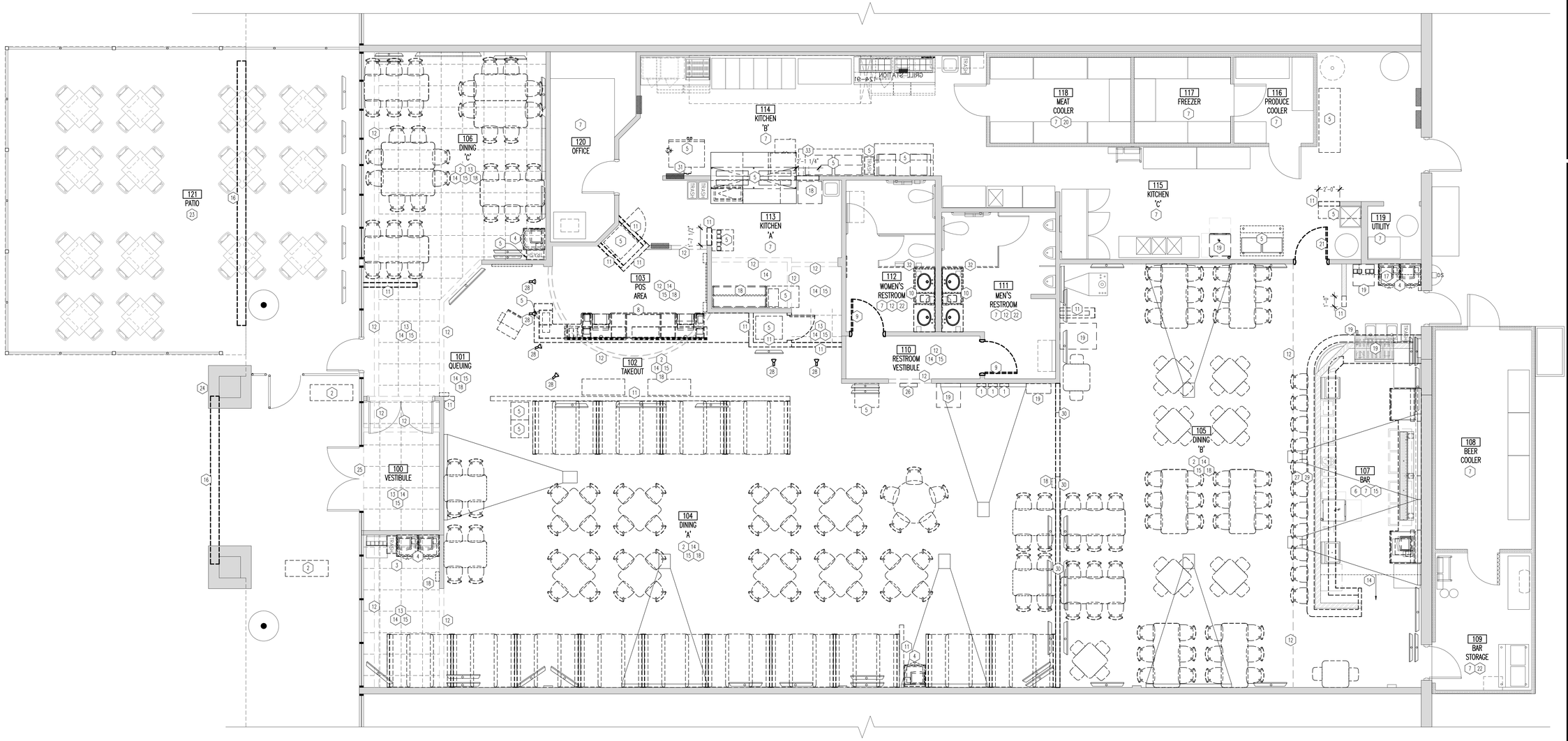

01 DEMOLITION PLAN

SCALE: 1/4"=1'-0"

GENERAL NOTES

1. REMOVE ALL BOOTHS, TABLES, CHAIRS, DRINK RAILS, TRASH UNITS AND STOOLS ALONG WITH ALL ASSOCIATED COMPONENTS AS SHOWN UNLESS NOTED OTHERWISE ON THIS PLAN. VENDOR IS RESPONSIBLE FOR STORAGE/DISPOSAL OF EXISTING FURNITURE.
2. G.C. TO ENSURE THAT THE ADDRESS BE MAINTAINED ON SITE DURING ALL PHASES OF CONSTRUCTION.
3. G.C. TO MAINTAIN EXISTING VOICE/ALARM COMMUNICATION SYSTEM THROUGH ALL PHASES OF CONSTRUCTION.
4. G.C. IS RESPONSIBLE FOR ENSURING DEMOLITION WORK SCOPE IS COORDINATED WITH NEW WORK SCOPE AND ALL PARTIES INVOLVED, INCLUDING BUT NOT LIMITED TO A/V VENDOR, EQUIPMENT VENDOR, MILLWORK VENDOR, BMW, AND SUB CONTRACTORS.
5. EXISTING LIGHTING, DIFFUSERS, CEILING, SOFFITS AND CEILING TILE TO REMAIN THROUGHOUT UNLESS NOTED OTHERWISE ON PLANS. FIX ALL BROKEN/DAMAGED FIXTURES AND REPLACE DAMAGED/BROKEN CEILING TILE AS NECESSARY.
6. UNLESS NOTED ON THIS PLAN, ALL FINISHES ARE TO REMAIN THROUGHOUT KITCHEN, COOLERS, OFFICE, BAR STORAGE, AND RESTROOMS.
7. THE G.C. SHALL MAINTAIN THE WORK SITE IN AN ORDERLY MANNER, FREE OF ACCUMULATED DEBRIS WITH MATERIALS STORED IN ORDER TO MINIMIZE INTERFERENCE WITH WORK BEING PERFORMED. AT THE CONCLUSION OF THE WORK THE PROJECT SHALL BE CLEANED TO BMW CONSTRUCTION MANAGEMENT SATISFACTION. CLEAR EGRESS PATHS MUST BE MAINTAINED AT ALL TIMES.
8. G.C. IS TO EXERCISE EXTREME CARE DURING DEMOLITION SO AS NOT TO DAMAGE OR DISRUPT ALL UTILITIES OR SPRINKLER LINES. G.C. WILL BEAR SOLE RESPONSIBILITY OF ANY SUCH DISRUPTION OR DAMAGE.
9. IN ORDER TO CAUSE THE LEAST AMOUNT OF INCONVENIENCE, G.C. IS TO COORDINATE WITH THE LANDLORD AS NEEDED. G.C. IS TO PROVIDE AND INSTALL ALL TEMPORARY PROTECTED MEANS OF EGRESS. TEMPORARY LIGHTING, AND ALL SAFETY DEVICES IN ACCORDANCE WITH ALL STATE AND LOCAL CODES AND LANDLORD REQUIREMENTS. G.C. TO VERIFY WORKING CONDITION OF ALL EMERGENCY EGRESS LIGHTING AND EMERGENCY LIGHTING PRIOR TO SHUT DOWN.
10. G.C. TO REMOVE ALL FLOORING FINISHES IN AREAS EXCEPT IN KITCHEN, RESTROOMS, OFFICE, STORAGE, COOLERS, AND BAR, UNLESS OTHERWISE NOTED, AND PREPARE SLAB TO RECEIVE NEW FINISHES. REFER TO SHEET A400 FOR FURTHER INFORMATION. PATCH AND REPAIR ADJACENT FINISHES AS NECESSARY. CAP EXISTING MECHANICAL, PLUMBING AND ELECTRICAL SERVICES BELOW SLAB AS REQUIRED, TYPICAL THROUGHOUT. SALVAGE DINING TILE AS REQUIRED FOR ANY PATCH/REPAIR THAT MAY BE REQUIRED IN THE RESTROOMS.
11. STRUCTURE TO REMAIN, REPORT ANY DISCREPANCIES TO ARCHITECT PRIOR TO THE BEGINNING OF CONSTRUCTION.
12. ALL EXISTING ELECTRICAL PANELS AND EQUIPMENT TO REMAIN. REFER TO ELECTRICAL SHEETS FOR ADDITIONAL INFORMATION.
13. ALL EXISTING RECEPTACLES TO REMAIN UNLESS NOTED OTHERWISE ON PLANS, REFER TO ELECTRICAL DRAWINGS. ALL PUBLIC RECEPTACLES ARE TO BE BLACK WITH BLACK COVERPLATES, UPGRADE AS REQUIRED.
14. AT THE CONTRACTOR'S OPTION; DEMOLISH OR REMOVE MORE OR LESS EXISTING WORK, PROVIDED THAT SUCH VARIATION WILL EXPEDITE THE PROJECT AND NOT INCREASE THE EXPENSE TO THE OWNER. THESE OPTIONS SHALL BE SUBJECT TO OWNER APPROVAL.
15. ALL ABANDONED ELECTRICAL AND TELEPHONE CONDUIT, PLUMBING LINES, DRAIN LINES, AND MECHANICAL DUCTWORK AS THE RESULT OF DEMOLITION SHALL BE REMOVED. ALL CAPPED LINES AND WIRE TO BE TAKEN BACK TO SOURCE.
16. G.C. IS RESPONSIBLE FOR PATCHING AND/OR REPAIRING EXISTING FLOOR SLAB AND WALLS AFTER COMPLETION OF ALL DEMOLITION AND PRIOR TO THE COMMENCEMENT OF NEW CONSTRUCTION. G.C. IS TO PATCH, REPAIR AND LEVEL EXISTING FLOOR SLAB AND INFORM TENANT OF ALL SEVERE IRREGULARITIES IN EXISTING SLAB IMMEDIATELY. AREAS OF SAW CUTTING OF THE EXISTING SLAB TO BE REVIEWED BY THE G.C. PRIOR TO SHUT DOWN, COORDINATED WITH BMW CM, AND X-RAYED.
17. G.C. IS TO NOTIFY BMW CONSTRUCTION MANAGEMENT IMMEDIATELY OF ANY SEVERE DISCREPANCIES OR IRREGULARITIES DISCOVERED DURING DEMOLITION WHICH MIGHT AFFECT THE CURRENT STORE DESIGN.
18. G.C. IS TO CUT ALL NECESSARY OPENINGS FOR ANY REQUIRED PURPOSE AND REPAIR, WHERE NECESSARY. AFTER CUTTING IN SO FAR AS POSSIBLE ALL PROTRUSIONS, MARKS, CRACKS, OR OTHER EVIDENCE OF DAMAGED, DEFICIENT OR UNSAFE CONDITION, ANY PARTS WHICH ARE SPLIT, CRACKED, SPALLED, CHIPPED, BROKEN, MISSING, OUT OF LINE OR ADJUSTMENT MECHANICALLY OR STRUCTURALLY UNSAFE OR UNSOUND, BENT, TORN, OR OTHERWISE DEFICIENT OR INJURED IN ANY MANNER SHALL BE REMOVED, REPLACED, REPAIRED OR RESTORED.
19. G.C. IS RESPONSIBLE FOR REMOVING ALL DEMOLISHED ITEMS, DEBRIS, ETC., FROM SITE. G.C. IS RESPONSIBLE FOR PROPERLY DISPOSING OF ALL ITEMS ACCORDING TO ANY APPLICABLE LOCAL OR STATE ORDINANCES. EQUIPMENT VENDOR IS RESPONSIBLE FOR DISPOSAL OF ALL EXISTING EQUIPMENT SPECIFIED TO BE REMOVED.
20. EXISTING DOORS AND FRAMES TO REMAIN AND BE REFINISHED, UNLESS NOTED OTHERWISE ON PLANS, REFER TO DOOR SCHEDULE ON SHEET A200.
21. G.C. TO REMOVE ALL EXPOSED WIRES, CONDUIT AND ALL ASSOCIATED ITEMS RAN ON THE WALLS, RELOCATE TO INSIDE THE WALL. ANY EXPOSED ITEMS WILL NEED TO BE RAN IN THE WALLS, COORDINATE IN THE FIELD FOR ALL ITEMS EFFECTED.
22. COORDINATE WITH OWNER ON REMOVAL AND STORAGE FOR RELOCATION OF WALL DECOR.
23. COORDINATE WITH OWNER, LANDLORD AND LOCAL AUTHORITIES FOR SIZE AND LOCATION OF STORAGE CONTAINERS AND DUMPSTERS. MUST BE COORDINATED PRIOR TO CONSTRUCTION START.
24. G.C. TO COORDINATE STORAGE AND POSSIBLE RELOCATION OF ANY EQUIPMENT AND FURNITURE SPECIFIED TO BE REMOVED WITH EQUIPMENT VENDOR, G.C. TO PROVIDE STORAGE OF ITEMS. COORDINATE WITH BMW CM.
25. EXISTING FIRE EXTINGUISHERS IN DINING ROOM TO BE REMOVED DURING CONSTRUCTION AND REINSTALLED IN APPROXIMATELY THE SAME LOCATION UNLESS NEW LAYOUT REQUIRES RELOCATION. COORDINATE WITH SHEET A200. ALL FRAMES TO BE IN STAINLESS STEEL CASES, UPGRADE AS REQUIRED. RELOCATE EXISTING FIRE EXTINGUISHERS, WHERE APPLICABLE PER NEW LAYOUT AND DEMOLITION, TO CLOSEST POSSIBLE LOCATIONS. COORDINATE WITH A200 AND LOCAL JURISDICTIONS.
26. G.C. TO INSPECT ALL WALLS, REPLACE, REPAIR, SECURE ANY DAMAGED SECTIONS. BRING ENTIRE TENANT SPACE TO "LIKE NEW" CONDITION.
27. ALL PROJECTION UNITS AND FLAT SCREEN TVS ARE TO BE REMOVED AND BAGGED DURING CONSTRUCTION, UNLESS OTHERWISE NOTED. RELOCATE AS SHOWN ON SHEET EQ-1. G.C. IS RESPONSIBLE FOR BAGGING. G.C. TO COORDINATE WITH A/V VENDOR FOR STORAGE/DISPOSAL AND RELOCATION IN NEW LAYOUT.
28. G.C. TO COORDINATE WITH A400 ON LOCATION OF WC1; ONLY REMOVE WC1 FROM WALLS THAT WILL BE RECEIVING FRP OR FCP2. REPLACE ALL DAMAGED FINISHES, VERIFY IN THE FIELD. ALL WOOD TRIM THROUGHOUT TO BE REMOVED, INCLUDING FROM RESTROOM. NO BEECH WOOD TRIM TO REMAIN INCLUDING WINDOW SILLS, MISC. TRIM, WALL CAPS, BANDBOARD, AND CHAIR RAIL.
29. G.C. IS TO COORDINATE THE REMOVAL OF SECURITY SENSORS AND DETECTORS AS REQUIRED FOR THE INSTALLATION OF NEW FINISHES PRIOR TO SHUT DOWN.
30. G.C. TO COORDINATE WITH MONITORING COMPANY PRIOR TO SHUT DOWN FOR THE REMOVAL AND REINSTALLATION OF FIRE PULLS ON WALLS THAT ARE TO RECEIVE NCHHA (FCP2). VERIFY IN THE FIELD
31. REFER TO SHEET A100 FOR EXTERIOR DEMOLITION SCOPE OF WORK.
32. ALL EXISTING DECOR TO BE RETAINED. G.C. TO COORDINATE WITH BMW CM FOR EVALUATION OF DECOR FOR REALLOCATION. REFER TO SHEETS A400 AND A600 FOR NEW LAYOUT.

KEY NOTES

1. REMOVE BUZZTIME/JUKE BOX AND ASSOCIATED ELECTRICAL COMPONENTS. PATCH WALL CONSTRUCTION WHERE EQUIPMENT WAS REMOVED. PREPARE FOR NEW FINISHES.
2. G.C. TO REMOVE ALL FURNITURE INCLUDING, TABLES, CHAIRS, BOOTHS, BAR STOOLS, AND BENCHES IN INDICATED AREAS. COORDINATE WITH BMW CM FOR STORAGE/DISPOSAL OF ALL COMPONENTS.
3. PREPARE AREA AT SERVER STATION FOR NEW FLOOR SINK INSTALLATION, REMOVE EXISTING SUMP PUMP AND ASSOCIATED COMPONENTS. COORDINATE WITH PLUMBING DRAWINGS.
4. G.C. TO REMOVE EXISTING POS STATION MILLWORK/COUNTERTOP. COORDINATE WITH OWNER FOR STORAGE OF POS EQUIPMENT FOR RELOCATION IN NEW LAYOUT WHERE APPLICABLE. REFER TO SHEET EQ-1 FOR NEW LAYOUT.
5. INDICATED EQUIPMENT TO BE REMOVED AND RELOCATED IN NEW LAYOUT. REFER TO SHEET EQ-1 FOR FURTHER INFORMATION. G.C. TO VERIFY IN FIELD WORKING CONDITION OF EXISTING EQUIPMENT AND COORDINATE WITH OWNER FOR STORAGE/REPLACEMENT.
6. FRONT AND BACK BAR COUNTERTOPS, BACK BAR CABINETS, AND LIQUOR DISPLAYS TO BE REMOVED. EXISTING 30 TAP BEER SYSTEM, POS EQUIPMENT, AND UNDERCOUNTER LIGHTING TO BE REMOVED, AND SALVAGED FOR REINSTALLATION ON NEW COUNTERTOP. ALL OTHER EQUIPMENT ABOVE AND BELOW COUNTERS TO REMAIN UNLESS OTHERWISE NOTED; COORDINATE STORAGE OF EQUIPMENT DURING CONSTRUCTION AS REQUIRED. REFER TO SHEETS A200 AND EQ-1 FOR FURTHER INFORMATION. REPAIR WALL FINISHES AS NECESSARY FOR NEW WORK.
7. ALL EXISTING EQUIPMENT, FINISHES, AND FIXTURES THROUGHOUT KITCHEN, MANAGER'S OFFICE, STORAGE AREAS, COOLERS, AND RESTROOMS, INCLUDING BUT NOT LIMITED TO FLOORING, CEILING, AND WALL LIGHTING, AND MECHANICAL EQUIPMENT, ARE TO REMAIN UNLESS OTHERWISE NOTED ON THIS PLAN. G.C. IS RESPONSIBLE TO VERIFY THE CONDITION IN THE FIELD AND PATCH AND REPAIR FINISHES AS NECESSARY OR AS INDICATED ON SHEET A400. G.C. TO COORDINATE ANY TEMPORARY STORAGE OF EQUIPMENT WHEN NECESSARY DURING CONSTRUCTION.
8. G.C. TO REMOVE ALL MILLWORK/EQUIPMENT IN EXISTING POS/ORDERING AREA. COORDINATE WITH VENDOR FOR DISPOSAL/STORAGE OF MILLWORK AND EQUIPMENT. G.C. TO REMOVE EXISTING COUNTERTOP, MENU BOARDS ABOVE, AND MILLWORK BELOW AT ORDER COUNTER. EQUIPMENT AND POS STATIONS TO BE DISCONNECTED AND STORED FOR RE-INSTALLATION. COORDINATE WITH OWNER ON STORAGE OF EQUIPMENT.
9. RESTROOM ENTRY DOORS TO BE REMOVED. VERIFY CONDITION OF DOOR FRAMES IN THE FIELD AND REUSE AND REPAINT IF POSSIBLE. PREPARE FOR REPLACEMENT DOOR AND REPAINTING OF FRAMES, COORDINATE WITH A200.
10. EXISTING VANITIES, ASSOCIATED MILLWORK, SINKS, FAUCETS, AND MIRRORS ARE TO BE REMOVED. TRASH RECEPTACLE BELOW TO BE RELOCATED IN NEW LAYOUT. WOOD TRIM THROUGHOUT RESTROOM TO BE REMOVED AND REPLACED. COORDINATE WITH SHEET A700 FOR ADDITIONAL INFORMATION. PATCH AND REPAIR ADJACENT FINISHES AS NECESSARY IN PREPARATION FOR REPLACEMENTS.
11. G.C. TO REMOVE EXISTING FULL/PARTIAL HEIGHT WALL, BULKHEAD ABOVE, AND ALL ASSOCIATED COMPONENTS. PATCH AND REPAIR ADJACENT CONSTRUCTION AND SLAB. RELOCATE EXISTING FIRE EXTINGUISHERS, WHERE APPLICABLE, TO CLOSEST POSSIBLE LOCATIONS. COORDINATE WITH A200 AND LOCAL JURISDICTIONS.
12. EXISTING CEILING/SOFFIT/BULKHEAD TO REMAIN. REPAIR GRID AND LAY-IN TILES/DRYWALL AS NECESSARY TO BRING TO A LIKE NEW CONDITION AND PREPARE TO BE REPAINTED AS NECESSARY PER SHEET A400.
13. REMOVE EXISTING LAY-IN CEILING AS INDICATED. PREPARE FOR INSTALLATION OF NEW. REFER TO A200 AND A400 FOR FURTHER INFORMATION. ASSOCIATED BULKHEADS TO REMAIN.
14. G.C. TO REMOVE EXISTING FLOORING AND FLOORING TRANSITION FROM ALL PUBLIC AREAS EXCEPT THE RESTROOMS, AND BAR, OR UNLESS OTHERWISE NOTED. PREPARE SLAB TO RECEIVE NEW FLOORING. SLAB TO BE VERIFIED FOR LEVELNESS IN THE FIELD IN THAT AREA AND PREPARED PROPERLY FOR NEW TILE OR CARPET FINISH. REFER TO SHEET A200 FOR NEW WALL LOCATION AND SHEET A400 FOR FLOORING TRANSITION. (FLOORING SHOULD NOT BE MODIFIED IN RESTROOMS, BAR, KITCHEN, STORAGE OR OFFICE). SALVAGE DINING TILE AS NECESSARY FOR RESTROOM PATCH/REPAIR. VERIFY IN THE FIELD.
15. G.C. TO REMOVE ALL WOOD TRIM THROUGHOUT FROM WALLS WINDOWS AND DOORS, AND OTHER WALL FINISHES FROM WALLS TO RECEIVE "FCP2". REFER TO SHEET A400 FOR INFORMATION ON NEW FINISHES AND TRIM. PATCH AND REPAIR CYP. WALLBOARD AS REQUIRED FOR NEW WORK. (NO BEECH WOOD TO REMAIN THROUGHOUT SPACE). WC1 TO REMAIN ON ALL WALLS NOT RECEIVING FCP2 OR FRP. BLACK FRP TO REMAIN ON ALL WALLS UNLESS OTHERWISE SPECIFIED ON A400. REFER TO SHEET A400.
16. SIGN VENDOR TO REMOVE EXISTING SIGNAGE FROM EXTERIOR FACADES. G.C. TO PATCH AND REPAIR SUBSTRATE AS NECESSARY AND PREPARE FOR NEW REPLACEMENT SIGNAGE. REFER TO SHEET A100 FOR FURTHER EXTERIOR SCOPE.
17. G.C. TO REMOVE EXISTING SHELVING/CABINETRY ABOVE.
18. G.C. TO REMOVE ALL MISCELLANEOUS MILLWORK THROUGHOUT SPACE. PATCH AND REPAIR ADJACENT FINISHES AS NECESSARY. COORDINATE WITH OWNER FOR STORAGE/DISPOSAL OF MILLWORK. VERIFY IN THE FIELD.
19. G.C. TO REMOVE INDICATED EQUIPMENT AND ALL ASSOCIATED PLUMBING AND ELECTRICAL. COORDINATE WITH VENDOR FOR STORAGE/DISPOSAL..
20. REMOVE EXISTING FLOORING WITHIN INDICATED COOLER, AND PREPARE FOR REPLACEMENT RUBBER FLOORING. REFER TO A400 FOR ADDITIONAL INFORMATION.
21. EXISTING DOOR AND FRAME LEADING TO KITCHEN "C" TO BE REMOVED. PREPARE OPENING FOR NEW BI-SWING DOOR. MODIFY OPENING AS NECESSARY. COORDINATE WITH SHEET A200.
22. G.C. TO STEAM CLEAN, NO "ACID WASH" ALL TILE AND GROUT; REMOVE ALL FIXTURE SEALANT; AND PREPARE SURFACE FOR NEW SEALANT. BRING RESTROOM TO A "LIKE NEW" CONDITION. ALL FINISHES AND FIXTURES TO REMAIN UNLESS OTHERWISE NOTED ON THIS SHEET. COORDINATE WITH SHEET A200 FOR MORE INFORMATION. REPAIR/INFILL ALL MISSING OR DAMAGED TILES ON THE FLOOR AND WALLS. VERIFY IN THE FIELD.
23. EXISTING PATIO FURNITURE AND EQUIPMENT TO REMAIN UNLESS OTHERWISE NOTED. PREPARE EXISTING FENCE AND CHECKERED FACIA TO BE REPAINTED.
24. EXISTING EIFS CHECKERS AT ENTRY COLUMN TO BE ELIMINATED. COORDINATE WITH SHEET A100 FOR ADDITIONAL INFORMATION.
25. EXISTING ENTRY DOORS TO BE REBALANCED AND EXISTING CLOSERS TO BE REMOVED AND REPLACED. COORDINATE WITH SHEET A200.
26. SIGN VENDOR TO REMOVE EXISTING SINGLE SIDED RESTROOM SIGN. PREPARE FOR REPLACEMENT BLADE MOUNTED SIGN.
27. REMOVE EXISTING BAR FOOT RAIL AND PREPARE FOR REPLACEMENT. COORDINATE WITH SHEET EQ-1.
28. REMOVE ALL MONOPOINT LIGHTING EXCEPT AT BAR AND WHERE NEW MURAL IS TO BE INSTALLED IN VESTIBULE. VERIFY FUNCTION OF REMAINING MONOPOINTS AND REPAIR AS NEEDED WITH RETAINED/SALVAGED FIXTURES. VERIFY LOCATION IN THE FIELD.
29. EXISTING MARMOLEUM AT BAR DIE WALL TO BE REMOVED TO ACCOMMODATE NEW ELECTRICAL OUTLET INSTALLATIONS, EXCEPT ON CURVED PORTION. PREPARE FOR REPLACEMENT FINISHES. REFER TO A400 FOR FURTHER INFORMATION. SALVAGE EXISTING PRUNE HOOKS FOR REINSTALLATION, IF THEY CURRENTLY EXIST.
30. G.C. TO REMOVE EXISTING BULKHEAD ABOVE AND WALL BEHIND. PATCH AND REPAIR ADJACENT CONSTRUCTION AS NECESSARY.
31. EXISTING ELECTRICAL PANEL TO BE RELOCATED TO OPPOSITE SIDE OF WALL. REFER TO ELECTRICAL SHEETS FOR FURTHER INFORMATION.
32. EXISTING PARTITION WALL IN RESTROOMS TO BE TEMPORARILY REMOVED FOR MODIFICATION. COORDINATE WITH NEW WALL CONSTRUCTION ON SHEET A200 AND RESTROOM SCOPE ON SHEET A700.
33. REMOVE INDICATED PORTION OF WALL UP TO 7'-6" A.F.F. TO ALIGN WITH ADJACENT EXPO WINDOW BULKHEAD. WALL REMOVAL IS IN PREPARATION FOR RELOCATION OF EXPO UNIT.

ORIGINAL PRINT SIZE – 30 X 42

Intertech Design Services, Inc.
Architecture and Engineering
9675 Montgomery Rd.
Cincinnati, Ohio 45242
Phone: (513) 791-8888
Fax: (513) 792-7923
Web: www.intertechdesigninc.com

INTERTECH DESIGN SERVICES, INC. HAS EXERCISED REASONABLE SKILL AND JUDGMENT IN PROVIDING PROFESSIONAL SERVICES. INTERTECH DESIGN SERVICES, INC. IS NOT A GUARANTOR OF THE PROJECT TO WHICH ITS SERVICES ARE DIRECTED, AND ITS RESPONSIBILITY IS LIMITED TO WORK SPECIFICALLY PERFORMED FOR THE CLIENT, OWNERSHIP OF THE CLIENT'S WORK THREE YEARS IS NOT UNDER THE DIRECT CONTROL OF INTERTECH DESIGN SERVICES, INC.

THIS DOCUMENT, AND THE IDEAS AND DESIGNS INCORPORATED HEREIN, AS AN INSTRUMENT OF PROFESSIONAL SERVICE, IS THE PROPERTY OF INTERTECH DESIGN SERVICES, INC. AND IS NOT TO BE USED, IN WHOLE OR IN PART, FOR ANY OTHER PROJECT, WITHOUT THE WRITTEN AUTHORIZATION OF INTERTECH DESIGN SERVICES, INC. © COPYRIGHT INTERTECH DESIGN SERVICES, INC. 2015 ALL RIGHTS RESERVED.

© COPYRIGHT INTERTECH DESIGN SERVICES, INC. 2015

BUFFALO WILD WINGS

CORPORATE - IN-LINE
TOWNE SOUTH PLAZA
3718 US HWY 41
TERRE HAUTE, IN 47802

DRAWING ISSUE

NO	DESCRIPTION	DATE
	70% CLIENT CHECKSET	11/25/15
	BID AND PERMIT	12/22/15

STAMP

12.22.2015

DEMOLITION PLAN

SCALE: 1/4" = 1'-0"

Drawn By: LJC Checked: ARC

PROJECT NUMBER
15-0124

SHEET NUMBER
D100

KEY PLAN

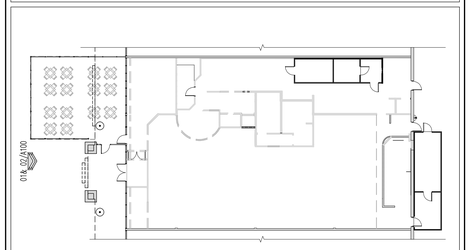

KEY NOTES

1. EXISTING PAINTED CHECKERS TO BE ELIMINATED. NO REVEAL EXIST-CHECKERS ARE PAINTED. REFER TO ELEVATION 02/A100 FOR NEW FINISH SPECIFICATION.
2. PATCH AND REPAIR EXISTING EIFS TO BRING TO A LIKE NEW CONDITION WHERE SIGNAGE WAS REMOVED AND PREPARE FOR NEW PAINT FINISH.
3. EXISTING BUILDING FINISHES, TRIM, EQUIPMENT, AND PATIO CANOPY TO REMAIN. G.C. TO PATCH AND REPAIR AS REQUIRED TO BRING TO A LIKE NEW CONDITION, WHERE DAMAGES OCCURED DUE TO NEW WORK.
4. REMOVE PORTION OF EXISTING EIFS BACK TO SUBSTRATE TO PREPARE FOR NEW METAL STUD ARCHITECTURAL ELEMENT. COORDINATE WITH SHEET A100 FOR EXACT LOCATION.
5. VENDOR TO REMOVE ALL EXISTING SIGNAGE AND FROM BUILDING. G.C. TO PATCH AND REPAIR ANY DAMAGE AS NECESSARY AND PREPARE FOR SIGN REPLACEMENT PER THIS SHEET.
6. ILLUMINATED SIGN WITH SUPPLIED AND INSTALLED BY SIGN VENDOR, G.C. TO SUPPLY BLOCKING, POWER, AND FINAL ELECTRICAL CONNECTION – REFER TO 03/A100. ALL CHANNEL LETTERS TO HAVE WHITE FACE. SIGN VENDOR IS RESPONSIBLE FOR COORDINATION OF MOUNTING METHOD WITH EXISTING CONSTRUCTION.
7. EXISTING DOOR DECALS TO REMAIN. REPLACE AS NECESSARY DUE TO EXISTING DAMAGED OR DOOR TINT INSTALLATION.
8. EXISTING EIFS TO BE REPAINTED. PAINT FINISH TO BE 'C1' SHERWIN WILLIAMS SW6906 "CITRUS". REPAIR EIFS TO BRING TO A "LIKE NEW" CONDITION PRIOR TO PAINTING. ENSURE BLACK AND WHITE CHECKERS ARE ELIMINATED WITH PAINTING. ENTIRE FRONT AND SIDE SURFACE OF EXISTING ARCHITECTURAL ELEMENT TO BE PAINTED 'C1'.
9. NEW ARCHITECTURAL ELEMENT TO SHOWCASE SIGNAGE. CONSTRUCTION TO BE METAL STUD WITH EIFS FINISH. FINISH TO BE DRYVIT LICORICE #715 SANDPEBBLE FINISH WITH TWO COATS DEMANDIT COLOR COATING. REFER TO DETAIL 04 & 05/A100 FOR FURTHER INFORMATION.
10. 48" BLACK TROUGH LIGHTS TO BE INSTALLED ON EXISTING FACADE AS SHOWN. USE EXTENSION ARMS AND LSI ABOLITE MOUNTING BRACKET IN BLACK. VERIFY LENGTH OF ARM IN THE FIELD. COORDINATE IN THE FIELD WITH ELECTRICAL CONTRACTOR. PATCH AND REPAIR EIFS AS NECESSARY.
11. PAINT EXISTING CHECKERED PATIO FASCIA AND PATIO FENCE #SW6991 "BLACK MAGIC". USE EXTERIOR GRADE RUST INHIBITING PAINT. NO YELLOW CHECKERS TO REMAIN.

GENERAL NOTES

1. G.C. TO ENSURE THAT THE ADDRESS BE MAINTAINED ON SITE DURING ALL PHASES OF CONSTRUCTION.
2. G.C. TO MAINTAIN EXISTING VOICE/ALARM COMMUNICATION SYSTEM THROUGH ALL PHASES OF CONSTRUCTION.
3. G.C. IS RESPONSIBLE FOR ENSURING DEMOLITION WORK SCOPE IS COORDINATED WITH NEW WORK SCOPE AND ALL PARTIES INVOLVED, INCLUDING BUT NOT LIMITED TO SIGN VENDOR, A/V VENDOR, EQUIPMENT VENDOR, MILLWORK VENDOR, BWW, AND SUB CONTRACTORS.
4. UNLESS OTHERWISE NOTED ON THIS PLAN, ALL EXTERIOR FINISHES ARE TO REMAIN.
5. THE G.C. SHALL MAINTAIN THE WORK SITE IN AN ORDERLY MANNER, FREE OF ACCUMULATED DEBRIS WITH MATERIALS STORED IN ORDER TO MINIMIZE INTERFERENCE WITH WORK BEING PERFORMED. AT THE CONCLUSION OF THE WORK THE PROJECT SHALL BE CLEANED TO BWW CONSTRUCTION MANAGEMENT SATISFACTION. CLEAR EGRESS PATHS MUST BE MAINTAINED AT ALL TIMES.
6. G.C. IS TO EXERCISE EXTREME CARE DURING DEMOLITION SO AS NOT TO DAMAGE OR DISRUPT ANY UTILITIES OR SPRINKLER LINES. G.C. WILL BEAR SOLE RESPONSIBILITY OF ANY DISRUPTION OR DAMAGE.
7. IN ORDER TO CAUSE THE LEAST AMOUNT OF INCONVENIENCE, G.C. IS TO COORDINATE WITH BWW CM AND LANDLORD A CONVENIENT TIME TO PERFORM DEMOLITION WORK. G.C. IS TO PROVIDE AND INSTALL ALL TEMPORARY PROTECTED MEANS OF EGRESS. TEMPORARY LIGHTING, AND ALL SAFETY DEVICES IN ACCORDANCE WITH ALL STATE AND LOCAL CODES.
8. STRUCTURE TO REMAIN, REPORT ANY DISCREPANCIES TO ARCHITECT PRIOR TO THE BEGINNING OF CONSTRUCTION.
9. AT THE CONTRACTOR'S OPTION; DEMOLISH OR REMOVE MORE OR LESS EXISTING WORK, PROVIDED THAT SUCH VARIATION WILL EXPEDITE THE PROJECT AND NOT INCREASE THE EXPENSE TO THE OWNER. THESE OPTIONS SHALL BE SUBJECT TO OWNER APPROVAL.
10. G.C. IS RESPONSIBLE FOR PATCHING AND, OR REPAIRING EXISTING EXTERIOR FINISHES AFTER COMPLETION OF ALL DEMOLITION AND PRIOR TO THE COMMENCEMENT OF NEW CONSTRUCTION.
11. G.C. IS TO NOTIFY BWW CONSTRUCTION MANAGEMENT IMMEDIATELY OF ANY SEVERE DISCREPANCIES OR IRREGULARITIES DISCOVERED DURING DEMOLITION WHICH MIGHT AFFECT THE CURRENT STORE DESIGN.
12. G.C. IS RESPONSIBLE FOR REMOVING ALL DEMOLISHED ITEMS, DEBRIS, ETC., FROM SITE. G.C. IS RESPONSIBLE FOR PROPERLY DISPOSING OF ALL ITEMS ACCORDING TO ANY APPLICABLE LOCAL OR STATE ORDINANCES.
13. COORDINATE WITH OWNER AND LOCAL AUTHORITIES FOR SIZE AND LOCATION OF STORAGE CONTAINERS AND DUMPSTERS. MUST BE COORDINATED PRIOR TO CONSTRUCTION START.
14. VERIFY CONDITIONS OF EXISTING LED, METAL COPING, AND MISCELLANEOUS BREAKMETAL FINISH AND REPAIR AS REQUIRED.
15. COORDINATE WITH MECHANICAL, PLUMBING, AND ELECTRICAL DRAWINGS FOR ALL PENETRATIONS IN THE EXTERIOR FACADES IF NECESSARY.
16. BUILDING SIGNAGE IS UNDER A SEPARATE PERMIT & NOT PART OF THIS PLAN REVIEW. G.C. TO PROVIDE BLOCKING AND POWER FOR ALL SIGNAGE WHERE IT DOES NOT ALREADY EXIST – COORDINATE WITH SIGN VENDOR AND DRAWINGS. G.C. TO PROVIDE FINAL ELECTRICAL CONNECTION.
17. SIGNAGE VENDOR IS RESPONSIBLE FOR ALL LOCAL JURISDICTION REQUIREMENTS ON SIGNAGE INSTALLATION AND SPECIFICATIONS.
18. ALL EXISTING EXTERIOR FINISHES TO REMAIN UNLESS NOTED OTHERWISE ON THIS SHEET. G.C. TO PATCH AND REPAIR AS NECESSARY FOR NEW SIGNAGE INSTALLATION.
19. G.C. TO VERIFY LOCATION, SIZE, & TYPE OF ADDRESS NUMBERS & LETTERS FOR BUILDING WITH LOCAL AUTHORITIES AND UPDATE EXISTING ONLY AS REQUIRED. LETTERS & NUMBERS TO BE PROVIDED & INSTALLED BY G.C.
20. G.C. TO PROVIDE AND INSTALL KNOX BOX AT 6'-0" ABOVE GRADE IF ONE DOES NOT CURRENTLY EXIST. VERIFY IN FIELD AND WITH LOCAL FIRE MARSHAL.

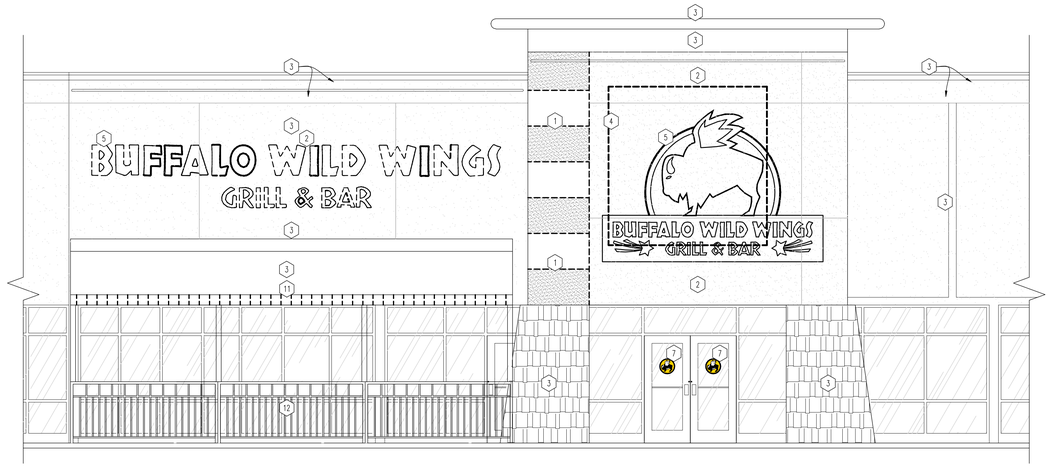

01 EAST DEMOLITION ELEVATION
SCALE: 1/4"=1'-0"

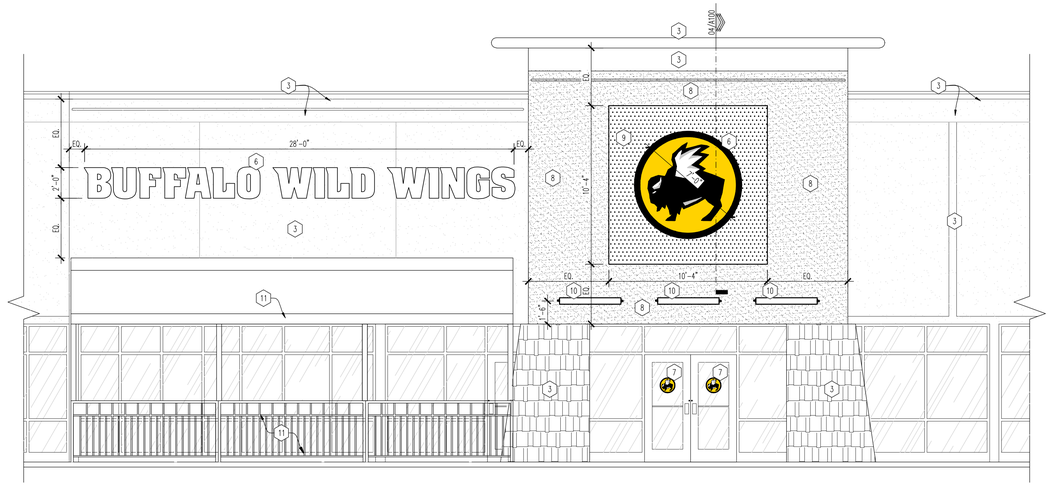

02 EAST EXTERIOR ELEVATION
SCALE: 1/4"=1'-0"

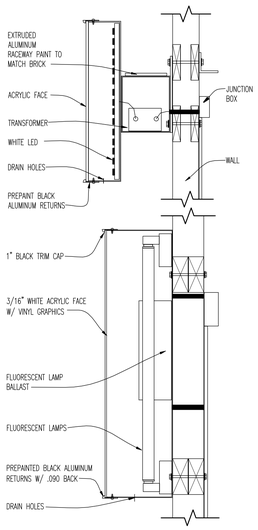

NOTES

1. LOGO CABINET IS FABRICATED WITH BLACK PREPAINTED RETURNS AND .090" ALUMINUM BACK WITH COOL WHITE HIGH OUTPUT FLUORESCENT LAMP ILLUMINATION. RETAINERS ARE 1" BLACK TRIM CAP. FACES ARE #7328 WHITE ACRYLIC OVERLAID ON THE FIRST SURFACE WITH #525 BRIGHT YELLOW ARLON TRANSLUCENT FILM AND #22 BLACK ARLON OPAQUE FILM WITH THE EYE, HORN AND WING WEEDED OUT WHITE.
2. BUFFALO WILD WINGS LETTERS ARE FABRICATED FROM BLACK PREPAINTED ALUMINUM WITH WHITE NEON ILLUMINATION RETAINERS ARE 1" BLACK TRIM CAP FACES ARE WHITE ACRYLIC SIGN. VENDOR TO VERIFY MOUNTING METHODS.
3. GC TO PROVIDE BLOCKING FOR SIGNAGE AND FINAL ELECTRICAL CONNECTIONS.
4. G.C. CONSULT SIGN COMPANY ON CIRCUIT REQUIREMENTS AND INSTALL THE CORRECT CIRCUITS.
5. DEDICATED CIRCUITS (SHALL BE SUPPLIED BY A BRANCH CIRCUIT RATED AT LEAST 20 AMPERES THAT SUPPLIES NO OTHER LOAD)

SIGNAGE SHOWN IS FOR DESIGN INTENT AND LOCATION PURPOSES ONLY. ELECTRICAL CONTRACTOR TO CONFIRM POWER REQUIREMENTS WITH SIGNAGE VENDOR.

SIGNAGE PERMIT BY VENDOR. VENDOR TO COORDINATE MOUNTING TYPE WITH ALL LOCAL CODES AND OWNER.

03 SIGNAGE DETAIL
SCALE: 1/2"=1'-0"

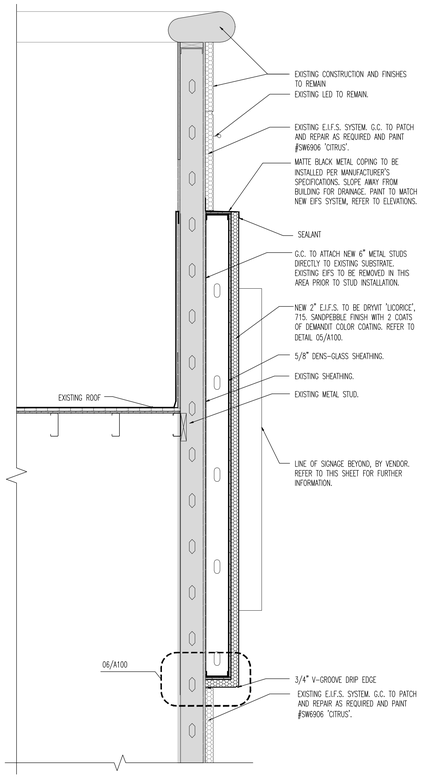

04 SIGNAGE BUILD OUT
SCALE: 3/4"=1'-0"

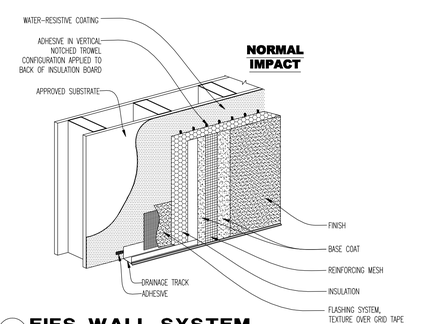

05 EIFS WALL SYSTEM
SCALE: 3"=1'-0"

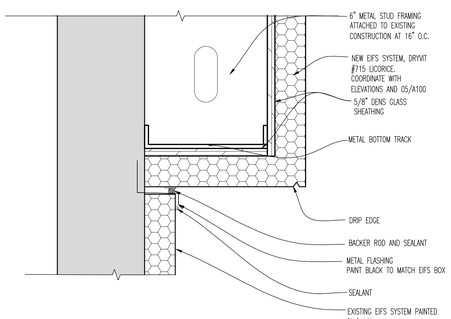

06 EIFS BUILD-OUT AT BASE
SCALE: 3"=1'-0"

ORIGINAL PRINT SIZE – 30 X 42

Intertech Design Services, Inc.
Architecture and Engineering
9675 Montgomery Rd.
Cincinnati, Ohio 45242
Phone: (513) 791-8888
Fax: (513) 792-7923
Web: www.intertechdesign.net

INTERTECH DESIGN SERVICES, INC. HAS EXERCISED REASONABLE SKILL AND JUDGMENT IN PROVIDING PROFESSIONAL SERVICES. INTERTECH DESIGN SERVICES, INC. IS NOT A GUARANTOR OF THE PROJECT TO WHICH ITS SERVICES ARE DIRECTED, AND ITS RESPONSIBILITY IS LIMITED TO WORK SPECIFICALLY PERFORMED FOR THE CLIENT, OWNERS OF THE CLIENT, OR THIRD PARTIES NOT UNDER THE DIRECT CONTROL OF INTERTECH DESIGN SERVICES, INC.

THIS DOCUMENT, AND THE IDEAS AND DESIGNS INCORPORATED HEREIN, AS AN INSTRUMENT OF PROFESSIONAL SERVICE, IS THE PROPERTY OF INTERTECH DESIGN SERVICES, INC. AND IS NOT TO BE USED, IN WHOLE OR IN PART, FOR ANY OTHER PROJECT, WITHOUT THE WRITTEN AUTHORIZATION OF INTERTECH DESIGN SERVICES, INC. © COPYRIGHT INTERTECH DESIGN SERVICES, INC. – ALL RIGHTS RESERVED.

© COPYRIGHT INTERTECH DESIGN SERVICES, INC. 2015

BUFFALO WILD WINGS

CORPORATE - IN-LINE
TOWNE SOUTH PLAZA
3718 US HWY 41
TERRE HAUTE, IN 47802

DRAWING ISSUE

NO	DESCRIPTION	DATE
	70% CLIENT CHECKSET	11/25/15
	BID AND PERMIT	12/22/15

STAMP

12.22.2015

DEMOLITION AND EXTERIOR ELEVATIONS

SCALE: AS NOTED

Drawn By LJC Checked ARC

PROJECT NUMBER
15-0124

SHEET NUMBER
A100

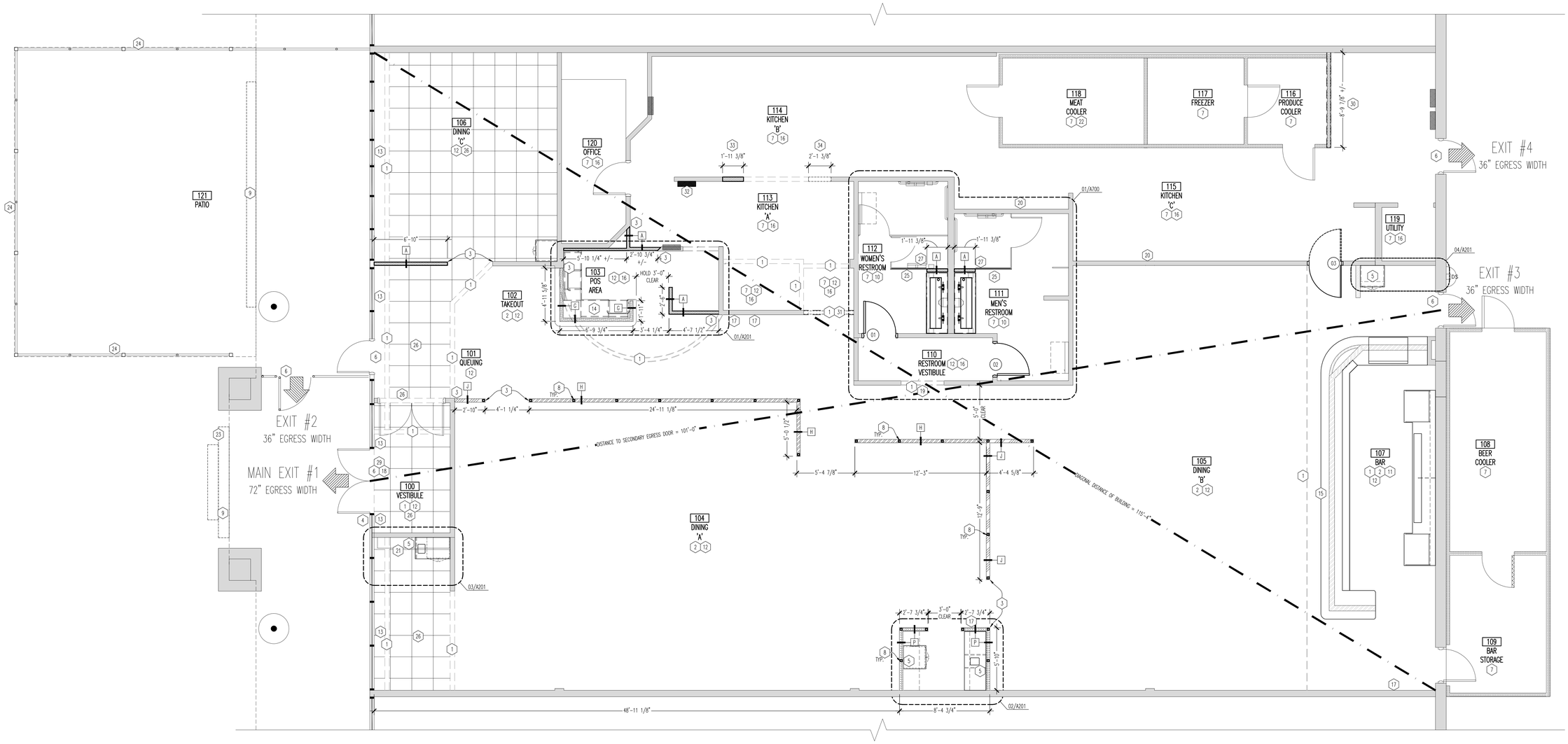

01 CONSTRUCTION PLAN

SCALE: 1/4"=1'-0"

ACCESSIBILITY NOTES

ENTRY AND PATIO DOORS TO BE FULLY ACCESSIBLE – CLEAR AREA REQUIRED AT DOOR TO BE LEVEL OR 2% SLOPE MAXIMUM DOOR PULLS MOUNTED AT 48"AFF

FRAME TYPE

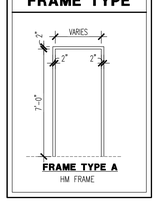

FRAME TYPE A
HM FRAME

DOOR TYPES

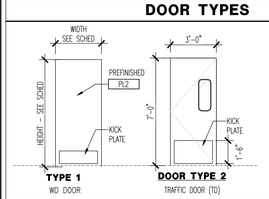

TYPE 1
WD DOOR

DOOR TYPE 2
TRAFFIC DOOR (TD)

NOTES:
1. RESTROOM DOOR GRAPHICS FURNISHED AND INSTALLED BY BWW.
2. TRAFFIC DOOR– CHASE INDUSTRIES (# SC–3018) – PLASTIC LAMINATE FACED – KITCHEN SIDE TO BE WHITE, PATRON SIDE TO BE BLACK, EDGE TRIM TO BE CHANNEL TYPE.

WALL LEGEND

- FULL HEIGHT WALL TO 6" ABV. CEILING – TYPE A REF WALL TYPES
- 34" LOW WALL– TYPE G REF WALL TYPES
- 48" LOW WALL– TYPE H REF WALL TYPES
- 60" LOW WALL– TYPE J REF WALL TYPES
- 98" LOW WALL– MATCH TYPE P REF WALL TYPES
- EXISTING PARTIAL HEIGHT WALL
- EXISTING WALL

NOTE: REFER TO SHEET A401 FOR WALL FRAMING TYPES. REFER SHEET A400 FOR WALL FINISH INFORMATION.

DOOR SCHEDULE

NO	ROOM	DOOR SIZE	DOOR TYPE	DOOR THK	DOOR MATL	DOOR FINISH	FRAME TYPE	FRAME MATL	FRAME FINISH	HDW GROUP	REMARKS
01	WOMENS RESTROOM	3'-0" x 7'-0" (+/– VIF)	1	1 3/4"	WD	PL2	EXISTING	EXISTING	C4	1	A,B
02	MENS RESTROOM	3'-0" x 7'-0" (+/– VIF)	1	1 3/4"	WD	PL2	EXISTING	EXISTING	C4	1	A,B
03	KITCHEN TRAFFIC	3'-0" x 7'-0"	2	1 3/4"	TD	---	A	HM	C4	3	A,C

REMARKS:
A. FRAME PAINT FINISH TO BE SATIN. PROVIDE NEW FRAME AS NECESSARY.
B. VERIFY EXISTING FRAME SIZE AND ABILITY TO ACCOMMODATE NEW DOOR AS SPECIFIED. COORDINATE IN THE FIELD.
C. HOLLOW METAL FRAMES FOR TRAFFIC DOORS WITHOUT STOP.

HARDWARE SCHEDULE

HARDWARE GROUP #1
DOOR # 01 – WOMENS
DOOR # 05 – MENS

QTY.	MFG.	ITEMS	
1–½ PAIR	PBB	HINGES	BB81 4 1/2" X 4 1/2"
1	HA	PULL/PLATE	5358 8" CTC X 2000 3.5" X15"
1	HA	PUSH/PLATE	200F 4" X 16"
1	LCN	CLOSER	1461 X HOLD OPEN 110–DEGREE
1	HA	KICKPLATE	12" X 34" BSE
1	DON	WALL STOP	1407

HARDWARE GROUP #3
DOOR # 07 – KITCHEN TRAFFIC
CHASE INDUSTRIES OR EQUAL – ALL MOUNTING HARDWARE IS INCLUDED WITH DOUBLE ACTING DOOR

HARDWARE GROUP #4
EXTERIOR FRONT ENTRY

QTY.	MFG.	ITEMS	
3 PAIR	PBB OR COMP	HINGES	BB81 4–1/2" X 4–1/2" NRP
1	VON	EXIT	CD9947NL (CONCEALED VERT. RODS)
1	VON	EXIT	CD9947ED (CONCEALED VERT. RODS)
2	HA	OFFSET PULL	658 8" CTC
2	LCN	CLOSER	1461 X CUSH ARM STOP X 110 DEGREE
1 SET	REE	WEATHERSTRIP	
2	REE	DOOR SWEEP	323 X 36"
1	REE	THRESHOLD	5245A X 72"

PROVIDED BY HARDWARE SUPPLIER, CYLINDERS AND FLOOR STOPS.

1	SCH	RIM CYLINDER
2	SCH	MORTISE CYLINDERS (FOR DOGGING)
2	IVES	FLOOR STOPS 446FS28

REMARKS:
1. Wood doors 01 & 02 are to have 1" undercut.
2. Verify door hardware provided by storefront contractor. Provide additional hardware required for each door.
3. General Contractor is responsible for changing out door cylinders except "Insta–key" cores (storefront doors and detex hardware).
4. Provide door signage/labels.
5. Mount door closer out of public view. Thru–bolt hardware.
6. Hand activated latching and locking doors that are in a path of travel shall be operable with a single effort by lever type hardware, panic bars, push–pull activating bars or other hardware designed to provide passage without requiring the ability to grasp the opening hardware. Locked exit doors shall operate as above in egress direction.
7. Maximum effort to operate doors shall not exceed 8 1/2 pounds for exterior doors and 5 pounds for interior doors. Such pull or push effort being applied at right angles to hinged doors and at the center plane of sliding or folding doors. Compensating devices or automatic door operators may be utilized to meet the above standard when fire doors are required. The maximum effort to operate the door may be increased to the maximum allowable by the appropriate administrative authority, not to exceed 15 pounds.

KEY NOTES

1. EXISTING GYP. BD SOFFIT, BULKHEAD, OR CEILING TO REMAIN AND BE REPAINTED ONLY IF SPECIFIED ON SHEET A400. G.C. TO VERIFY EXISTING EQUIPMENT IN SOFFIT/CEILING IN THE FIELD. REFER TO A400 FOR FINISH PLAN. PATCH AND REPAIR TO BRING TO LIKE–NEW CONDITION.
2. REFER TO EQUIPMENT PLAN AND SCHEDULE ON SHEETS EQ–1 AND EQ–2 FOR TELEVISION INFORMATION AND LOCATIONS. COORDINATE WITH SHEET A600 FOR ELEVATIONS.
3. ALIGN FULL/PARTIAL HEIGHT WALL STUD WITH WALL, COLUMN OR CORNER AS INDICATED. ENSURE GYP. BOARD IS FLUSH WITH EXISTING, WHERE APPLICABLE, TO ALLOW FOR PROPER FINISH MATERIAL INSTALLATION.
4. G.C. TO VERIFY LOCATION OF KNOX BOX OR PROVIDE NEW IF ONE DOES NOT EXIST, COORDINATE WITH FIRE MARSHAL ON REGULATIONS. RELOCATE EXISTING AS REQUIRED.
5. G.C. TO PROVIDE FIRE–RETARDANT BLOCKING FOR ALL NEW WALL MOUNTED CABINETRY, OR COUNTERTOPS. REFER TO SHEET EQ–1 AND COORDINATE WITH MILLWORK VENDOR FOR ADDITIONAL INFORMATION.
6. G.C. TO INSPECT EXISTING HARDWARE CONDITIONS. REPAIR/REPLACE AS NECESSARY TO BRING TO A LIKE–NEW CONDITION. PROVIDE PANIC HARDWARE AT ALL EGRESS DOORS AND PATIO GATES. REFER TO HARDWARE TYPES. IF REPLACEMENT IS NECESSARY, PROVIDE HARDWARE EQUAL TO WHAT IS EXISTING. DOORS TAGGED WITH A DOOR NUMBER INDICATES NEW DOOR; REFER TO SCHEDULE ON THIS SHEET.
7. ALL EXISTING CONSTRUCTION AND FINISHES THROUGHOUT OFFICE, KITCHEN, COOLERS, STORAGE AND RESTROOMS TO REMAIN UNLESS OTHERWISE INDICATED ON THIS SHEET AND SHEET A400.
8. PARTIAL HEIGHT WALL POSTS TO BE FULL HEIGHT OF WALLS AND ARE TO BE INSTALLED AT ENDS AND CORNERS OF WALLS AND AT 48" O.C. REFER TO 07/A401.
9. G.C. TO PATCH AND REPAIR ANY DAMAGE TO FACADE CAUSED BY REMOVAL OF EXISTING SIGNAGE. REFER TO INFORMATION ON SHEET A100. ILLUMINATED SIGN SUPPLIED AND INSTALLED BY OWNER VENDOR. G.C. TO SUPPLY BLOCKING, POWER, AND FINAL ELECTRICAL CONNECTIONS.
10. RESTROOM VANITIES, SINKS, MIRRORS, FAUCETS, AND ENTRY DOORS TO BE REPLACED WITH NEW. ALL EXISTING PLUMBING FIXTURES TO BE RESEALED. REPAINT ALL GYP. WALLBOARD ON WALLS AND CEILING "C2". COORDINATE WITH SHEET A201, AND PLUMBING SHEETS. ALL EXISTING DIFFUSERS TO BE CLEANED.
11. G.C. TO PREPARE EXISTING BAR WALLS FOR INSTALLATION OF NEW COUNTERTOPS AND BACK BAR CABINETS. COORDINATE WITH SHEET A400, A703, AND EQ–1.
12. G.C. TO PATCH AND REPAIR EXISTING WALLS AND SLAB AS NECESSARY TO RECEIVE NEW FINISHES. REFER TO FINISH PLAN AND SCHEDULE ON A400.
13. VERIFY CONDITION OF EXISTING WINDOWS. RE–SEAL/REPAIR ON INTERIOR AND EXTERIOR FACES AS NECESSARY TO BRING TO A "LIKE NEW" CONDITION.
14. 34" ACCESSIBLE COUNTERTOP, REFER TO 07 GYI AND 08/A703.
15. G.C. TO INSTALL COAT HOOKS AT 48" O.C. AROUND BAR DIE WALL, AFTER FINISH INSTALLATION, AND NEW COMBO POWER RECEPTACLES. REFER TO ELECTRICAL SHEETS. VERIFY PLACEMENT IN THE FIELD.
16. VERIFY CONDITION OF EXISTING LAY–IN CEILING AND REPLACE ANY DAMAGED TILES AND REPAIR GRID IF APPLICABLE, MATCH EXISTING STYLE. ALL FIXTURE TRIMS TO BE WHITE IN WHITE CEILINGS AND BLACK IN BLACK CEILINGS.
17. G.C. TO PROVIDE AND INSTALL BLOCKING FOR RELOCATED AND NEW BUZZTIME CHARGING STATIONS OR NEW JUKE BOX. COORDINATE WITH SHEET EQ–1.
18. TINTED WINDOW FILM (TF1) TO BE APPLIED TO EXISTING DOORS. COORDINATE WITH EXISTING VINYL GRAPHICS.
19. OWNER'S VENDOR TO REPLACE EXISTING SINGLE SIDED RESTROOM SIGN WITH NEW ILLUMINATED DOUBLE SIDED RESTROOM SIGN. G.C. TO VERIFY EXISTING BLOCKING AND POWER IN THE FIELD. SIGN VENDOR TO PROVIDE SIGN.
20. G.C. TO VERIFY BLOCKING WITHIN EXISTING WALL FOR NEW SMART WALL SYSTEMS ABOVE 3–COMP AND PREP SINKS. PROVIDE AND INSTALL ADDITIONAL BLOCKING IF EXISTING BLOCKING IS NOT ADEQUATE. COORDINATE WITH SHEET EQ–1. RELOCATE ANY EXISTING WALL SHELVING AS NECESSARY TO ACCOMODATE SMART WALLS.
21. COORDINATE WITH PLUMBING SHEET FOR INSTALLATION OF NEW FLOOR SINK IN INDICATED AREA. PATCH AND REPAIR SLAB WHERE SUMP PUMP WAS REMOVED.
22. G.C. TO PREPARE INDICATED COOLER TO RECEIVE NEW RUBBER FLOORING. COORDINATE WITH SHEET A400 FOR FURTHER INFORMATION.
23. G.C. TO PROVIDE AND INSTALL DFS BUILD OUT AT FRONT ENTRY FOR NEW SIGNAGE. REFER TO SHEET A100 FOR ADDITIONAL INFORMATION. G.C. TO COORDINATE WITH EXISTING CONSTRUCTION.
24. PREPARE EXISTING PATIO RAILING, AND FACIA ON CANOPY TO BE REPAINTED SOLID BLACK. REFER TO EXTERIOR ELEVATIONS.
25. EXISTING STALL PARTITION TO BE MODIFIED TO LAYOUT SHOWN. REFER TO SHEET A700.
26. NEW LAY–IN CEILING SYSTEM, "ACT1" TO BE INSTALLED IN INDICATED AREAS. LIGHT FIXTURES AND OTHER CEILING EQUIPMENT TO BE REINSTALLED BACK IN EXISTING LAYOUT IN NEW CEILING. ALL TRIMS TO BE WHITE.
27. NEW WALL CONSTRUCTION IN RESTROOM TO SUPPORT NEW TROUGH SINK VANITY. ALIGN WALL WITH EXISTING PARTITION LOCATION AS SHOWN AS NOT TO ENCROUCH ON TOILET STALL DIMENSIONS.
28. FINISH/MODIFY EXISTING DOOR OPENING AS NECESSARY TO ACCOMODATE BI–SWING DOOR SYSTEM.
29. REBALANCE EXISTING DOOR AND CLOSER.
30. G.C. TO PROVIDE NEW 3 5/8" METAL STUD, GYP. BOARD BULKHEAD TO ENCLOSE AREA ABOVE PRODUCE COOLER. VERIFY DIMENSIONS IN THE FIELD, AND MATCH ADJACENT BULK HEAD CONSTRUCTION. REPAIR ASSOCIATED LAY–IN CEILING SYSTEM.
31. G.C. TO INSTALL NEW BULKHEAD 3 5/8" METAL STUD, GYP. BOARD BULKHEAD AT 8'–2" A.F.F. IN EXISTING OPENING. G.C. TO COORDINATE IN FIELD AND ENSURE BULKHEAD TO ALIGN WITH ADJACENT BULKHEADS AND MATCH EXISTING CONSTRUCTION.
32. LOCATION OF RELOCATED ELECTRICAL PANEL. VERIFY EXACT LOCATION IN THE FIELD AND COORDINATE WITH ELECTRICAL SHEETS.
33. INFILL INDICATED PORTION WALL WHERE EXPO UNIT PREVIOUSLY EXISTED AND PREPARE FOR NEW FRP FINISHES. MATCH ADJACENT WALL CONSTRUCTION. EXPO PLACEMENT IS BEING SHIFTED ON EXISTING WALL. COOORDINATE WITH SHEET EQ–1.
34. FINISH NEWLY EXPANDED EXPO OPENING WITH GYP. WALLBOARD AND PREPARE FOR STS TRIM. MATCH ADJACENT CONSTRUCTION AND FINISHES.

GENERAL NOTES

1. ALL DIMENSIONS AND SITE CONDITIONS ARE TO BE VERIFIED IN THE FIELD PRIOR TO THE START OF CONSTRUCTION AND BEFORE ORDERING MATERIALS. G.C. TO VERIFY PROPOSED WORK WILL COMPLY WITH EXISTING CONDITIONS. NOTIFY ARCHITECT IMMEDIATELY OF ANY DISCREPANCIES THAT EFFECT THE LAYOUT AND SCOPE OF WORK. ALL LOW WALL HEIGHTS ARE MEASURED FROM 100'–0" UNLESS NOTED OTHERWISE.
2. COORDINATE ALL LOW WALL HEIGHTS WITH INTERIOR ELEVATIONS ON SHEET A600 AND WALL TYPE DETAILS ON A401 TO ENSURE PROPER FRAMING HEIGHTS.
3. G.C. TO PREPARE WALLS TO RECEIVE NEW FINISHES AS INDICATED ON SHEET A400.
4. VERIFY LOCATIONS AND QUANTITIES OF EXISTING FIRE EXTINGUISHERS. INSTALL BLOCKING AS REQUIRED FOR ANY RELOCATED EXTINGUISHERS PRIOR TO CLOSING UP WALLS. IF NEW EXTINGUISHERS ARE NECESSARY, USE RECESSED CABINETS IN PUBLIC AREAS MOUNTED BELOW TRIM, AND SURFACE MOUNTED IN KITCHEN AREAS. COORDINATE FINAL LOCATIONS AND QUANTITIES WITH LOCAL FIRE MARSHAL. EXISTING BUILDING IS FULLY SPRINKLERED.
5. G.C. TO PROVIDE FIREBLOCKING AT INTERCONNECTIONS BETWEEN CONCEALED STUD WALL OR PARTITION SPACES AND BETWEEN CONCEALED VERTICAL AND HORIZONTAL SPACES SUCH AS DROPPED CEILINGS.
6. ALL DIMENSIONS ARE SHOWN STUD TO STUD, UNLESS NOTED OTHERWISE. "CLEAR" DIMENSION ARE TO FACE OF FINISHES. ALL EXISTING DIMENSIONS ARE TO BE FIELD VERIFIED PRIOR TO CONSTRUCTION AND ORDERING MATERIALS.
7. G.C. TO USE PRESSURE TREATED WOOD (FRT) AT ALL LOCATIONS WHERE WOOD IS IN CONTACT WITH CONCRETE OR MASONRY.
8. REFER TO INTERIOR ELEVATIONS ON SHEET A600 AND WALL FINISHES ON A400 FOR WALL FINISH INFORMATION.
9. EXIT DOOR MUST BE OPENABLE FROM EGRESS SIDE WITHOUT THE USE OF A KEY, SPECIAL KNOWLEDGE OR EFFORT.
10. THE OPENING FORCE FOR INTERIOR SIDE–SWINGING DOORS WITHOUT CLOSER SHALL NOT EXCEED A 5LB FORCE. FORCES SHALL BE APPLIED TO LATCH SIDE.
11. ALL DOORS, WINDOWS AND FRAMES SHALL BE COORDINATED WITH DOOR SCHEDULE ON THIS SHEET.
12. LIGHTING AND CEILING LAYOUT TO REMAIN UNLESS NOTED OTHERWISE ON D100 DEMOLITION PLAN, THIS SHEET, SHEET EQ–1, OR ELECTRICAL SHEETS. COORDINATE WITH BWW CM PRIOR TO BID ON ANY OTHER MODIFICATIONS REQUIRED.
13. EXISTING CEILINGS, LIGHTING AND HVAC GRILLES TO REMAIN, UNLESS OTHERWISE NOTED.
14. ALL INTERIOR WALLS ARE TO BE 3–5/8" CHANNEL TYPE, ROLL–FORMED, 22 GAUGE METAL STUDS, UNLESS INDICATED OTHERWISE ON THESE DOCUMENTS. GYP. WALLBOARD SHALL BE 5/8", FIRE CODE TYPE 'X', TAPERED EDGE, UNLESS OTHERWISE CALLED OUT ON THESE DOCUMENTS. INSTALL PER MANUFACTURER'S STANDARDS.
15. G.C. TO PROVIDE ADDITIONAL IN–WALL BLOCKING AS NEEDED FOR ALL EQUIPMENT SHOWN THROUGHOUT PLANS.
16. BUILDING SIGNAGE IS UNDER A SEPARATE PERMIT & NOT PART OF THIS PLAN REVIEW. G.C. TO PROVIDE BLOCKING AND POWER FOR ALL SIGNAGE WHERE IT DOES NOT EXIST– COORDINATE WITH SIGN VENDOR AND DRAWINGS. G.C. TO PROVIDE FINAL POWER CONNECTION.
17. SIGN VENDOR IS RESPONSIBLE FOR ALL LOCAL JURISDICTION REQUIREMENTS ON SIGNAGE INSTALLATION AND SPECIFICATIONS, AND TO VERIFY INSTALLATION METHOD WITH EXISTING CONSTRUCTION.
18. G.C. TO PROVIDE FIRE DEPARTMENT REQUIRED KEY BOX IF ONE DOES NOT ALREADY EXIST. COORDINATE LOCATION AND TYPE WITH LOCAL AUTHORITIES.
19. SEE MEP DRAWINGS AND RESPONSIBILITY SCHEDULE FOR INFORMATION REGARDING SPRINKLER AND FIRE ALARM SYSTEM – SYSTEMS BY GENERAL CONTRACTOR
20. EMERGENCY LIGHTS IN DINING AREAS SUCH THAT THEY DO NOT INTERFERE WITH WALL DECOR & TV PROJECTION SCREENS. REFER TO INTERIOR ELEVATIONS FOR ADDITIONAL INFORMATION. VERIFY EXISTING CONDITIONS.
21. ALL EXIT DOORS AND PATIO GATES EQUIPPED WITH PANIC HARDWARE, TYP. PROVIDE IF IT DOES NOT ALREADY EXIST. VERIFY IN THE FIELD.
22. REFER TO SHEET E100 FOR EMERGENCY LIGHTING. G.C. TO VERIFY FUNCTION OF ALL EMERGENCY LIGHTS AND EXIT SIGNS PRIOR TO SHUT DOWN.
23. STORE MONITORING COMPANY TO REMOVE AND REINSTALL EXISTING FIRE PULLS ON ALL WALLS TO RECEIVE NEW "FCP2" FINISH. G.C. TO COORDINATE PRIOR TO SHUT DOWN. REFER TO A400 FOR NEW FINISHES. VERIFY LOCATIONS IN THE FIELD.

ORIGINAL PRINT SIZE – 30 X 42

Intertech Design Services, Inc.
Architecture and Engineering
9975 Montgomery Rd.
Cincinnati, Ohio 45242
Phone: (513) 791-8888
Fax: (513) 792–7923
Web: www.intertechdesign.net

INTERTECH DESIGN SERVICES, INC. HAS EXERCISED REASONABLE SKILL AND JUDGMENT IN PROVIDING PROFESSIONAL SERVICES. INTERTECH DESIGN SERVICES, INC. IS NOT A GUARANTOR OF THE PROJECT TO WHICH ITS SERVICES ARE DIRECTED, AND ITS RESPONSIBILITY IS LIMITED TO WORK SPECIFICALLY PERFORMED FOR THE CLIENT, OWNERSHIP OF THE CLIENT'S SITE THAT IS NOT UNDER THE DIRECT CONTROL OF INTERTECH DESIGN SERVICES, INC.

THIS DOCUMENT, AND THE IDEAS AND DESIGNS INCORPORATED HEREIN, AS AN INSTRUMENT OF PROFESSIONAL SERVICE, IS THE PROPERTY OF INTERTECH DESIGN SERVICES, INC. AND IS NOT TO BE USED, IN WHOLE OR IN PART, FOR ANY OTHER PROJECT, WITHOUT THE WRITTEN AUTHORIZATION OF INTERTECH DESIGN SERVICES, INC. AND RECEIPT OF FEES DUE INTERTECH DESIGN SERVICES, INC. ALL RIGHTS RESERVED.

© COPYRIGHT INTERTECH DESIGN SERVICES, INC. 2015

BUFFALO WILD WINGS

CORPORATE – IN–LINE
TOWNE SOUTH PLAZA
3718 US HWY 41
TERRE HAUTE, IN 47802

DRAWING ISSUE

NO	DESCRIPTION	DATE
	70% CLIENT CHECKSET	11/25/15
	BID AND PERMIT	12/22/15

STAMP

12.22.2015

CONSTRUCTION PLAN

SCALE: 1/4" = 1'–0"
Drawn By CTW Checked ARG

PROJECT NUMBER
15–0124

SHEET NUMBER
A200

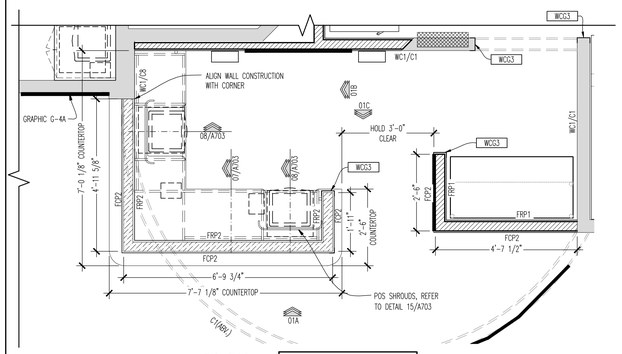

PLAN

NOTE:
REFER TO EQ DRAWINGS FOR EQUIPMENT INFORMATION

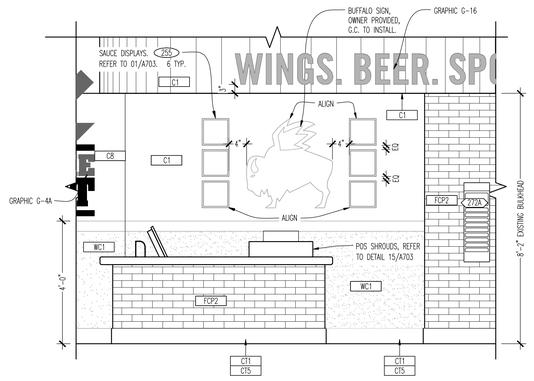

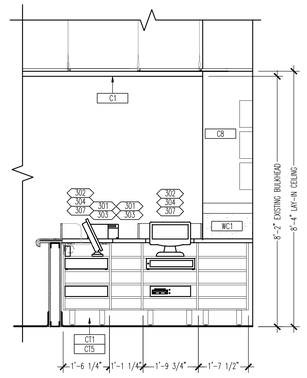

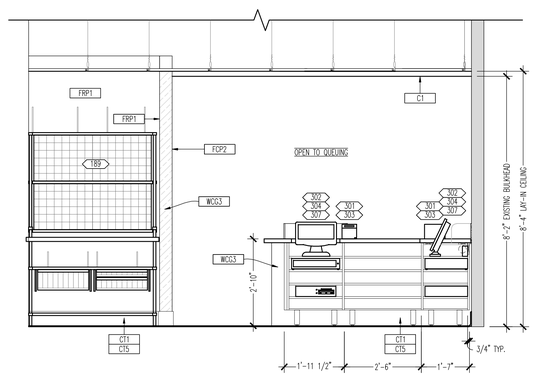

01 TAKE OUT COUNTER
SCALE: 1/2"=1'-0"

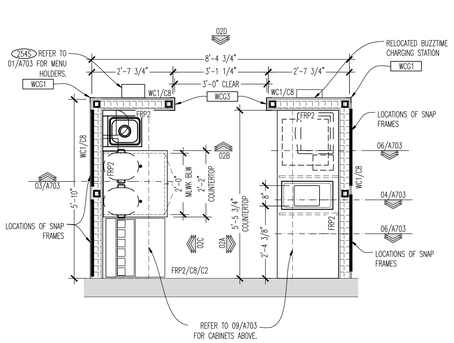

PLAN

NOTE:
REFER TO EQ DRAWINGS FOR EQUIPMENT INFORMATION

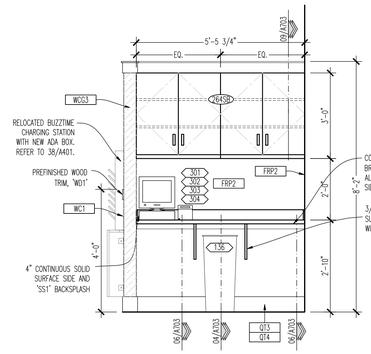

ELEVATION 02A

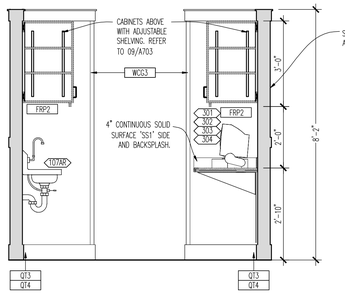

ELEVATION 02B

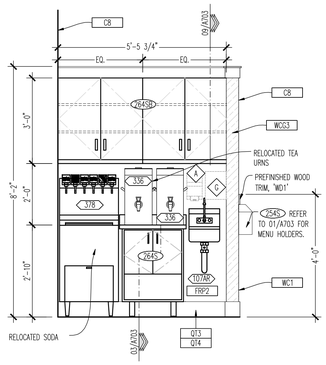

ELEVATION 02C

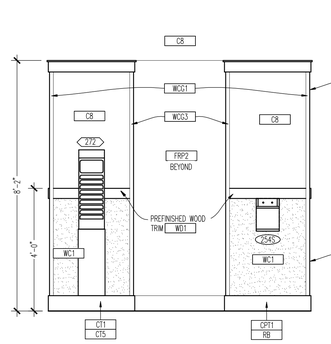

ELEVATION 02D

02 POS STATION
SCALE: 1/2"=1'-0"

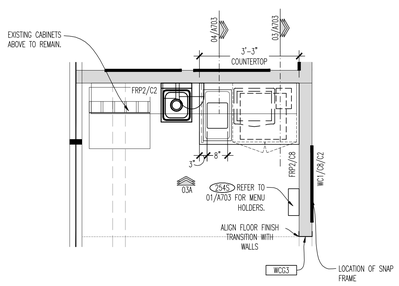

PLAN

NOTE:
REFER TO EQ DRAWINGS FOR EQUIPMENT INFORMATION

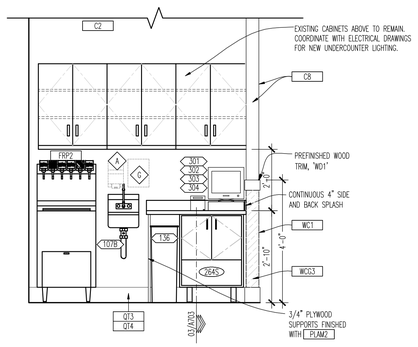

ELEVATION 03A

03 POS STATION
SCALE: 1/2"=1'-0"

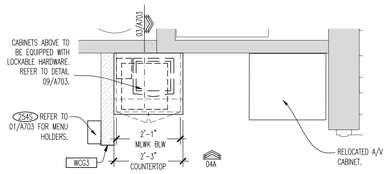

PLAN

NOTE:
REFER TO EQ DRAWINGS FOR EQUIPMENT INFORMATIONBLACK FRP2 EXISTS ON WALLS INDICATED AS "EXIST". IF IT DOES NOT REQUIRE REPAIR, IT IS TO BE CLEANED, AND REMAIN IN PLACE. OTHERWISE REPLACE WITH FRP2. REFER TO FINISH SCHEDULE ON EQ-2.

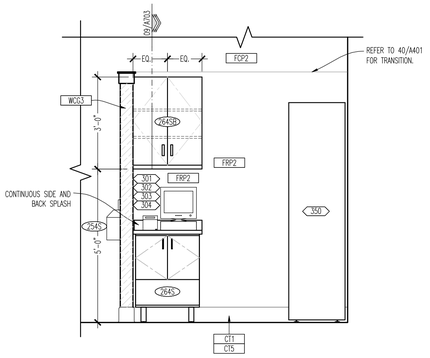

ELEVATION 04A

04 POS STATION
SCALE: 1/2"=1'-0"

ORIGINAL PRINT SIZE – 30 X 42

Intertech Design Services, Inc.
Architecture and Engineering
9975 Montgomery Rd.
Cincinnati, Ohio 45242
Phone: (513) 791-8888
Fax: (513) 792-7923
Web: www.intertechdesign.net

INTERTECH DESIGN SERVICES, INC. HAS EXERCISED REASONABLE SKILL AND JUDGMENT IN PROVIDING PROFESSIONAL SERVICES. INTERTECH DESIGN SERVICES, INC. IS NOT A GUARANTOR OF THE PROJECT TO WHICH ITS SERVICES ARE DIRECTED, AND ITS RESPONSIBILITY IS LIMITED TO WORK SPECIFICALLY PERFORMED FOR THE CLIENT. OWNERSHIP OF THE CLIENT'S FOR THIRD PARTIES NOT UNDER THE DIRECT CONTROL OF INTERTECH DESIGN SERVICES, INC.

THIS DOCUMENT, AND THE IDEAS AND DESIGNS INCORPORATED HEREIN, AS AN INSTRUMENT OF PROFESSIONAL SERVICE, IS THE PROPERTY OF INTERTECH DESIGN SERVICES, INC. AND IS NOT TO BE USED, IN WHOLE OR IN PART, FOR ANY OTHER PROJECT, WITHOUT THE WRITTEN AUTHORIZATION OF INTERTECH DESIGN SERVICES, INC. © COPYRIGHT INTERTECH DESIGN SERVICES, INC., ALL RIGHTS RESERVED.
© COPYRIGHT INTERTECH DESIGN SERVICES, INC. 2015

BUFFALO WILD WINGS

CORPORATE - IN-LINE
TOWNE SOUTH PLAZA
3718 US HWY 41
TERRE HAUTE, IN 47802

DRAWING ISSUE

NO	DESCRIPTION	DATE
	70% CLIENT CHECKSET	11/25/15
	BID AND PERMIT	12/22/15

STAMP

12.22.2015

ENLARGED PLANS AND ELEVATIONS
SCALE: 1/2" = 1'-0"
Drawn By CTW Checked ARG

PROJECT NUMBER
15-0124

SHEET NUMBER
A201

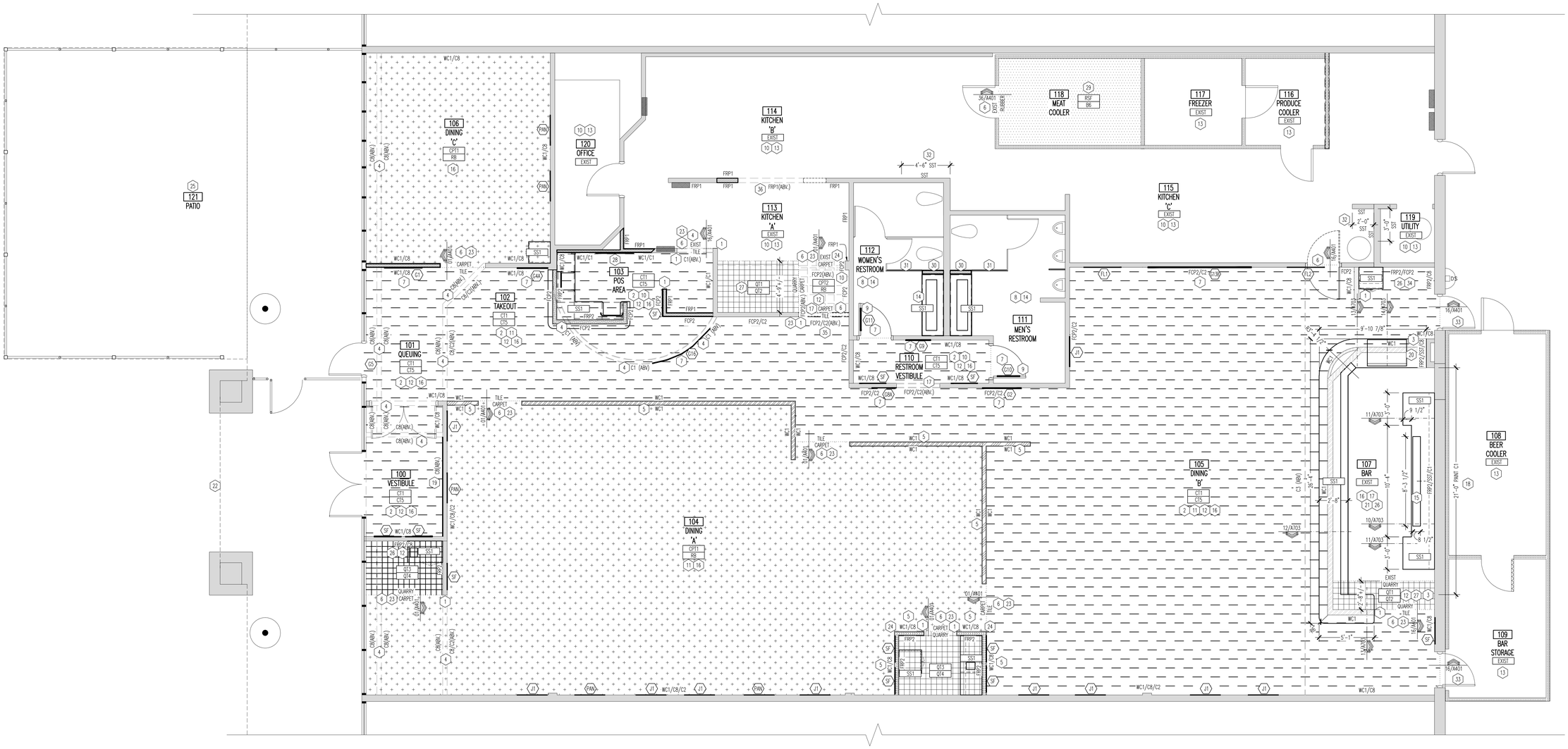

01 FLOOR FINISH PLAN

SCALE: 1/4"=1'-0"

FLOOR FINISH LEGEND

NOTES:
VERIFY WALL FINISHES WITH INTERIOR ELEVATIONS SHEET A600. SEE FINISH SCHEDULE FOR PRODUCT MANUFACTURER AND SPECIFICATION INFORMATION.

- CPT1 — CARPET – BROADLOOM
- CPT2 — CARPET – MODULAR
- CT1 — 6"X36" CERAMIC TILE WITH GT1 GROUT
- QT3 QT1 — 6"X6" QUARRY TILE WITH GT6 GROUT, OR "GT1" TO MATCH EXISTING
- RSF — MEMBRANE FLOOR SYSTEM – "PROTECT ALL" OR OWNER APPROVED EQUAL – BY G.C. WITH INTEGRATED BASE SYSTEM AND PREFORMED CORNERS.
- X — WALL TYPE TAG– REFER TO SHEET A401 FOR WALL FRAMING TYPES.
- XX — GRAPHIC/ DECOR TAG– REFER TO SHEET A600 FOR GRAPHICS/ DECOR ELEVATIONS AND BWW GRAPHICS PACKAGE. SEE SCHEDULE ON THIS SHEET

DECOR/GRAPHICS SCHEDULE

MARK	DESCRIPTION
G1	"WELCOME TO" WALL STENCIL
G2	"OFFICIAL SPONSOR" WALL STENCIL
G4A	TAKEOUT WALL STENCIL– INTERIOR
G5	PATIO DOOR WALL STENCIL
G6	BOOTH NUMBER GRAPHICS
G9	RESTROOM ALCOVE VINYL
G10	MEN'S RESTROOM DOOR VINYL
G11	WOMEN'S RESTROOM DOOR VINYL
G13B	DINING WALL STENCIL
G16	WINGS, BEER, SPORTS.. VINYL
J1	LARGE JERSEY
SF	SNAP FRAME PIECE
FL1	U.S.A. FLAG
FL2	STATE FLAG
PAN	PANORAMIC FRAMED PIECE

KEY NOTES

1. G.C. TO PROVIDE AND INSTALL 2" X WALL THICKNESS X 2" STAINLESS STEEL CHANNEL END CAPS UP TO CEILING, TOP WALL CAP, BULKHEAD OR UNDERSIDE OF COUNTERTOP AND SST AT ALL END WALL CONDITIONS IN SERVER STATIONS, KITCHEN AND BAR AS INDICATED. REFER TO 03/A401. TERMINATE CHAIR RAIL AT SST CAP WHERE APPLICABLE.
2. COORDINATE TILE PATTERN WITH BWW CONSTRUCTION MANAGER PRIOR TO INSTALLATION.
3. "FRP" STOPS, WC1/PAINT STARTS AT THIS POINT. USE TRIM WC02 AT TRANSITION.
4. FINISH UNDERSIDE OF SOFFIT OR BULKHEAD SAME AS WALL ABOVE..
5. FOR LOW WALL TRIM CONDITIONS, REFER TO DETAILS 10, 18, AND 31/A401.
6. FLOAT TO MAKE FLUSH AND PROVIDE AND INSTALL TRANSITION STRIP AT ALL FLOORING TRANSITIONS. REFER TO DETAILS 01, 16, AND 36/A401.
7. LOCATION OF VENDOR PROVIDED AND INSTALLED, GRAPHICS. REFER TO SHEETS A600 AND A201 FOR ADDITIONAL INFORMATION.
8. G.C. TO PRESSURE CLEAN TILE AND GROUT REPLACE ALL SEALANTS IN RESTROOMS, REPAIR GROUT NEEDED AND SEAL. REPAIR ALL FLOORING AND WALL TILE AS NECESSARY TO BRING TO A LIKE NEW CONDITION. MATCH EXISTING FINISHES. UTILIZE DINING ROOM TILE SALVAGE FOR ANY PATCHING/REPAIR.
9. G.C. TO REPLACE RESTROOM ENTRY DOORS. EXISTING FRAMES TO BE PAINTED 'C4' SATIN FINISH. REFER TO A200 FOR DOOR SCHEDULE AND A700 FOR RESTROOM PLAN.
10. G.C. TO REPLACE ALL STAINED/BROKEN/DAMAGED CEILING TILES (WHERE APPLICABLE). ANY REPLACEMENT OR NEW TILES TO MATCH TYPE AND STYLE OF EXISTING.
11. "OPEN CEILING" AREA ROOF JOISTS, DECK BEAMS, CONDUIT, FIXTURES, ETC. PAINTED AMAZING GRAY– 'C2' DUCTWORK, A/V POLES, AND HVAC EQUIPMENT PAINTED 'C3' IRON ORE.
12. G.C. TO PREPARE EXISTING SLAB FOR INSTALLATION OF NEW TILE. VERIFY THAT SLAB IS LEVEL IN INDICATED AREAS AND TILE ELEVATION IS CONSISTENT AND SEAMLESS.
13. ALL EXISTING FINISHES ARE TO REMAIN THROUGHOUT INDICATED AREAS UNLESS OTHERWISE NOTED.
14. NEW RESTROOM VANITY COUNTERTOP WITH SIDE AND BACKSPLASH, SINK, FAUCETS, AND MIRRORS. ALL EXISTING CYP. FINISHES INCLUDING WALL AND CEILING TO BE PAINTED 'C2,' AMAZING GRAY. NEW 'WD1' PREFINISHED WOOD TRIM TO BE PROVIDED AND REPACE EXISTING BEECH WOOD TRIM. COORDINATE WITH SHEET A700. ALL OTHER FLOORING AND WALL FINISHES TO REMAIN. ALL DIFFUSERS AND CEILING TRIMS TO BE WHITE.
15. G.C. TO PROVIDE AND INSTALL 18 GA. STS PANEL BEHIND EXISTING BEER TAPS PRIOR TO REINSTALLATION OF TAPS. RUN LENGTH OF BACK BAR WALL BETWEEN NEW LIQUOR STEPS DISPLAYS. COORDINATE WITH SHEET A600.
16. ALL EXISTING MARMOLEUM WAINSCOT/FRP2 TO REMAIN UNLESS NEW FCP2 IS SPECIFIED. REPLACE AS REQUIRED. NEW PREFINISHED CHAIR RAIL OR WALL CAP TO BE PROVIDED WHERE WC1 IS SPECIFIED.
17. G.C. TO PAINT UNDERSIDE OF EXISTING CEILING OR SOFFIT 'C2,' AMAZING GRAY. PAINT OR REPLACE EXISTING TRIM RINGS AND OTHER FIXTURES IN CEILING WHITE IF THEY DO NOT ALREADY EXIST AS WHITE.
18. BACK BAR WALL PAINT TO RUN EQUALLY PAST BACK BAR COUNTERTOP ON EACH END. ENSURE BEER MERCHANDISER IS WITHIN THE TRANSITION. DIMENSION ON PLAN FOR REFERENCE ONLY, VERIFY IN FIELD. FINISH TO TERMINATE AT INSIDE CORNER OF BUMPOUT AT SERVER PICK UP END OF BAR.
19. BWW VENDOR PROVIDED, G.C. INSTALLED CUSTOM WALL COVERING. 1X4 PREFINISHED WOOD TRIM FRAME. REFER TO 21/A401 AND COORDINATE WITH ELEVATIONS ON SHEET A600.
20. G.C. TO PROVIDE AND INSTALL 36"H STAINLESS STEEL WALL PANEL AT LOCATION OF GLASS RACK AFTER COUNTERTOP AND NEW FINISH INSTALLATION. REFER TO A600.
21. NEW FRONT AND BACK BAR COUNTERTOPS AT BAR TO BE REPLACED ON EXISTING DIE WALLS. REINSTALL UNDERCOUNTER LIGHTING AND EXISTING EQUIPMENT AS NECESSARY AFTER REPLACEMENT IS COMPLETE. VERIFY DIMENSIONS IN THE FIELD. EQUIPMENT VENDOR TO PROVIDE DROP IN BEER TAP DRAIN PAN IN BACK COUNTER.
22. EXISTING WEDGE FEATURE AT MAIN ENTRY TO BE PAINTED 'C1' CITRUS. REFER TO A100 FOR ADDITIONAL INFORMATION AND FULL EXTERIOR SCOPE OF WORK.
23. FLOORING FINISH TRANSITION TO ALIGN WITH PARTIAL OR FULL HEIGHT OR BUMPOUT AS INDICATED.
24. G.C. TO PROVIDE AND INSTALL 2"X2" STS CORNER GUARD 'WCG1' AT TRANSITION FROM "FCP2" TO PAINT OR "FRP" AND AT CORNERS OF SERVER STATIONS. 'WD1' TRIM TO STOP AT FULL HEIGHT STS TRIM.
25. EXISTING PATIO FENCE AND STANDING SEAM ROOF FACIA TO BE REPAINTED SOLID BLACK, TO MATCH 'C4'. USE RUST INHIBITING PAINT.
26. G.C. TO VERIFY CONDITION OF EXISTING BLACK FRP IN INDICATED AREAS AND REPLACE ONLY AS REQUIRED IF DAMAGED. OTHERWISE, EXISTING WALL FINISH TO REMAIN.
27. G.C. TO PROVIDE NEW TILE/PATCH AND REPAIR EXISTING QUARRY TILE AS INDICATED WITH "QT1". LOCALLY SOURCE TILE TO MATCH IN COLOR, THICKNESS, AND STYLE OF EXISTING. VERIFY EXTENT OF PATCH/REPAIR IN THE FIELD.
28. LOCATION OF OWNER VENDOR PROVIDED, G.C. INSTALLED BUFFALO SIGN. REFER TO SHEET A201.
29. NEW RUBBER FLOORING TO BE INSTALLED IN MEAT COOLER. VERIFY SIZE OF EXISTING COOLER IN THE FIELD. INSTALL PER MANUFACTURER'S RECOMMENDATIONS.
30. G.C. TO MATCH EXISTING FINISHES IN RESTROOM AT NEW WALL. USE SALVAGED TILE FROM DINING ROOM FOR RESTROOM WALL CONSTRUCTION. INSTALL WOOD TRIM AND PAINT ABOVE TO MATCH ADJACENT WALLS. COORDINATE IN THE FIELD.
31. MODIFY EXISTING TOILET PARTITION WALL TO ACCOMODATE NEW VANITY SUPPORT WALL. REINSTALL MODIFIED PANEL PORTION IN SAME LOCATION AS EXISTING.
32. INSTALL STAINLESS STEEL WALL PANEL AT INDICATED AREAS BEHIND EXISTING/RELOCATED EQUIPMENT. PANEL TO RUN FROM WALL BASE TO CEILING AT OVEN AND TO 48" AFF AT MOP SINK. G.C. TO COORDINATE IN FIELD FOR FINAL PANEL SIZE.
33. G.C. TO PAINT EXISTING DOOR AND DOOR FRAME 'C4'. SAND AND PRIME AS NECESSARY.
34. REFER TO 40/A401 FOR HORIZONTAL FINISH TRANSITION FROM FRP TO 'FCP2'.
35. PROVIDE 2X2 STS ANGLE ALONG BOTTOM EDGE OF BULKHEAD TO ADDRESS FCP TO PAN TRANSITION.
36. G.C. TO ENSURE FLOORING AND BASE PATCH AND REPAIR WHERE WALL CONSTRUCTION WAS MODIFIED FOR EXPO RELOCATION. LOCALLY SOURCE QUARRY TILE TO ENSURE MATCH TO EXISTING TILE THICKNESS, COLOR, AND TEXTURE.

GENERAL NOTES

1. THIS SHEET IS TO BE USED IN CONJUNCTION WITH SHEETS A401, A703 AND FINISH SCHEDULE ON SHEET EQ-2.
2. NEW 1X PREFINISHED WOOD CHAIR RAILS CONTINUOUS AROUND, DINING, TAKE-OUT, QUEUING, RESTROOM VESTIBULE, BAR, AND VESTIBULE WHERE MARMOLEUM 'WC1' IS BEING INSTALLED OR EXISTS. MITER OUTSIDE CORNERS, TOP OF CHAIR RAIL @ 4'-0" ABOVE SLAB (EXCEPT IN RESTROOMS), VERIFY IN FIELD. REFER TO 26/A401 FOR DETAIL.
3. FLOORS TO BE INSTALLED TO PROVIDE POSITIVE DRAINAGE TO ALL EXISTING OR NEW FLOOR DRAINS/SINKS. WHEN APPLICABLE, SET FLOOR DRAINS FLUSH WITH TOP OF TILE FLOOR OR SEALED CONCRETE, SEE PLUMBING DRAWINGS.
4. TYPICAL BASE INSTALLATIONS, REFER TO A401.
5. ALL HORIZONTAL SEAMS ARE TO BE CAULKED (IE: COUNTERTOPS, TILE BASE, WAINSCOT CAP, ETC).
6. SEALANTS TO BE CLEAR SILICONE IN FINISH APPLICATIONS UNLESS OTHERWISE NOTED.
7. FLOORING CONTRACTOR IS RESPONSIBLE FOR FLOOR PREPARATION NECESSARY FOR NEW FLOORING.
8. NO ACID TO BE USED FOR CLEANING FLOORS AFTER INSTALLATION AND DURING CONSTRUCTION TURNOVER. USE SOAP AND WATER WITH DECK BRUSH.
9. NO EPOXY SUBSTITUTES PERMITTED.
10. CAULK ALL CONTROL JOINTS. SEE SPEC FOR MANUFACTURER.
11. PAINTING CONTRACTOR RESPONSIBLE FOR FILLING ALL NAIL HOLES, SANDING AND TOUCH UP.
12. GC IS TO ROUGHEN THE FACE OF THE BOTTOM 4" OF THE MARMOLEUM PANEL PRIOR TO THE INSTALLATION OF THE COVE BASE.
13. GC TO USE APPROVED BY MANUFACTURER ADHESIVE TO BOND WALL BASE TO THE MARMOLEUM, FRP AND COOLERS.
14. ALL WALLS WITH 'FCP2' TO BE PAINTED 'C2' FROM 13"-6" +/- A.F.F., TO DECK. COORDINATE WITH INTERIOR ELEVATIONS, AND ALIGN WITH EXISTING BAR SOFFIT.
15. TRANSITION FROM 'C8' TO 'C2' ON WALLS WITH 'WC1' TO OCCUR AT 13'-6" +/- A.F.F. TO ALIGN WITH EXISTING BAR SOFFIT.
16. G.C. TO COORDINATE TV, PROJECTOR AND PROJECTOR SCREEN LOCATION WITH THE AUDIO VISUAL VENDOR AND OWNER. ALL CEILING MOUNTED EQUIPMENT TO RECEIVE ISOLATION MOUNTING PADS AND VIBRATION CONNECTIONS.
17. GROUT BED TO BE FEATHERED AT THE TRANSITION AND BETWEEN TILE SURFACES TO ENSURE A LEVEL FINISHED PROJECT.
18. REPLACE BROKEN/CRACKED/MISSING FLOOR TILE AND/OR BASE AS INDICATED ON THIS SHEET.
19. G.C. TO BID ON 100 SQ FT OF MISCELLANEOUS TILE AND GROUT REPAIRS THROUGHOUT KITCHEN AND BAR.
20. G.C. TO INVESTIGATE EXISTING CYP. WALLBOARD CONDITION. REPAIR AS NECESSARY TO RECEIVE NEW FINISHES.
21. ALL WOOD BLOCKING TO BE FIRE RETARDANT TREATED (FRT) – ONLY WHEN REQUIRED BY CONSTRUCTION TYPE.
22. FRP TO BE APPLIED TO PLYWOOD, DRYWALL OR CONCRETEBOARD WITH TROWELED ON FRANKLIN INTERNATIONAL –TITEBONDSOLVENT BASED FRP ADHESIVE PER MFG'S GUIDELINES.
23. REFER FLOOR PLAN FOR WALL FRAMING TYPE INDICATIONS.
24. REFER TO SHEET A100 FOR EXTERIOR FINISH INFORMATION.
25. G.C. TO REPLACE ALL STAINED/BROKEN/DAMAGED CEILING TILES AND MODIFY GRIDS AS NECESSARY TO ACCOMODATE NEW LAYOUT. ANY REPLACEMENT OR NEW TILES TO MATCH TYPE AND STYLE OF EXISTING.
26. G.C. TO PATCH THROUGHOUT AND REPAIR ALL EXISTING FINISHES TO REMAIN DUE TO NEW WORK, INCLUDING BUT NOT LIMITED TO FRP, TILE, AND BASE. COORDINATE WITH ALL TRADES.
27. CORNER GUARDS 'WCG–2' TO BE USED AT MARMOLEUM OUTSIDE CORNERS. REFER TO 04/A401.
28. CHAIR RAIL TO BE HELD BACK 1" FROM WINDOW FRAME.
29. USE FINISHING SCREWS AND CLEAR SILICONE SEALANT AT STS PANEL INSTALLATIONS.
30. NICHIA BRICK PANELS TO EXTEND TO 13'-6" +/- A.F.F.; TO ALIGN WITH EXISTING BAR SOFFIT. VERIFY ON THE FIELD, AND END WITH FULL 18" HEIGHT PANEL WHERE POSSIBLE. COORDINATE WITH BASE DETAIL 33/A401.
31. WHERE QUARRY TILE PATCH AND REPAIR IS REQUIRED AT EXISTING TILED AREAS, G.C. TO LOCALLY SOURCE TILE IN ORDER TO MATCH COLOR, THICKNESS, AND STYLE AS CLOSELY AS POSSIBLE.
32. ALL EXISTING DECOR IS TO BE RETAINED AT DEMOLITION. COORDINATE NEW DECOR LAYOUT WITH BWW CM.

WATERPROOFING:

1. GENERAL CONTRACTOR TO PROVIDE BOSTIK USA – HYDROMENT BLACK TOP 90210 – WATERPROOF MEMBRANE SYSTEM WHERE SHOWN ON WALL FINISHES – MEMBRANE SYSTEM TO PROJECT UP WALL 8" AND OUT FROM WALL 16". REFER SPECIFICATION INFORMATION ON COVER SHEET G001. ALTERNATE APPROVED PRODUCT IS THE LATICRETE 9235 WATERPROOF MEMBRANE SYSTEM.

EXTRA MATERIALS:

1. PROVIDE 10 SQ FT OF EACH SIZE, COLOR AND SURFACE FINISH OF TILE SPECIFIED
2. PROVIDE 1 GALLON OF EACH FLOOR CLEANER
   - EPOXY GROUT HAZE CLEANER: LEGSOLVE–IT
   - HEAVY GROUT AND STAIN REMOVER: TEXSPAR AND TEXSPAR PLUS
   - FLOOR CLEANER/SEALER: FLOORSHINE R20

PROTECTION OF FINISHED WORK:

1. LIMIT TRAFFIC OVER FINISHED FLOOR SURFACE. PROTECT AS NEEDED WITH PLYWOOD.
2. PROVIDE TWO LAYERS OF CRAFT PAPER OVER ALL TILE AND GROUT ON FLOORS. TAPE DOWN AND STAGGER SEAMS BY HALF THE WIDTH ON SECOND LAYER.

Intertech Design Services, Inc.
Architecture and Engineering
9975 Montgomery Rd.
Cincinnati, Ohio 45242
Phone: (513) 791-5888
Fax: (513) 792-7923
Web: www.intertechdesign.net

INTERTECH DESIGN SERVICES, INC. HAS EXERCISED REASONABLE SKILL AND JUDGMENT IN PROVIDING PROFESSIONAL SERVICES. INTERTECH DESIGN SERVICES, INC. IS NOT A GUARANTOR OF THE PROJECT TO WHICH ITS SERVICES ARE DIRECTED, AND ITS RESPONSIBILITY IS LIMITED TO WORK SPECIFICALLY PERFORMED FOR THE CLIENT, OWNERSHIP OF THE CLIENT'S PORTFOLIO IS NOT UNDER THE DIRECT CONTROL OF INTERTECH DESIGN SERVICES, INC.

THIS DOCUMENT, AND THE IDEAS AND DESIGNS INCORPORATED HEREIN, AS AN INSTRUMENT OF PROFESSIONAL SERVICE, IS THE PROPERTY OF INTERTECH DESIGN SERVICES, INC. AND IS NOT TO BE USED, IN WHOLE OR IN PART, FOR ANY OTHER PROJECT, WITHOUT THE WRITTEN AUTHORIZATION OF INTERTECH DESIGN SERVICES, INC. ANY UNAUTHORIZED USE OF INTERTECH DESIGN SERVICES, INC. ALL RIGHTS RESERVED.
© COPYRIGHT INTERTECH DESIGN SERVICES, INC. 2015

BUFFALO WILD WINGS

CORPORATE - IN-LINE
TOWNE SOUTH PLAZA
3718 US HWY 41
TERRE HAUTE, IN 47802

DRAWING ISSUE

NO	DESCRIPTION	DATE
	70% CLIENT CHECKSET	11/25/15
	BID AND PERMIT	12/22/15

STAMP

12.22.2015

FINISH PLAN

SCALE: 1/4" = 1'-0"

Drawn By LJC Checked RRG

PROJECT NUMBER
15-0124

SHEET NUMBER
A400

ORIGINAL PRINT SIZE – 30 X 42

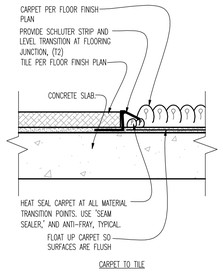

01 FLOOR TRANSITION
SCALE:6"=1'-0"

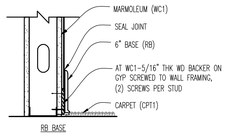

06 BASE DETAILS
SCALE: NO SCALE

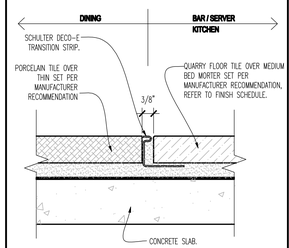

16 FLOOR TRANSITION
SCALE: 6"=1'-0"

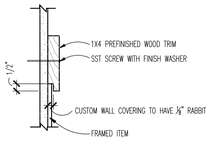

21 TRIM FRAME
SCALE: 3" = 1'-0"

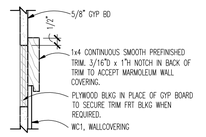

26 CHAIR RAIL DETAIL
SCALE: 3" = 1'-0"

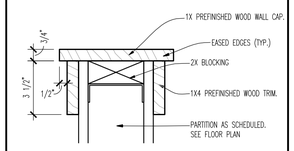

31 WOOD TRIM DETAILS
SCALE:3"=1'-0"

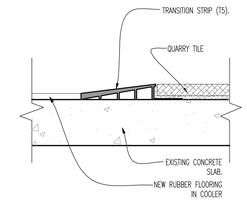

36 FLOOR TRANSITION
SCALE: 6"=1'-0"

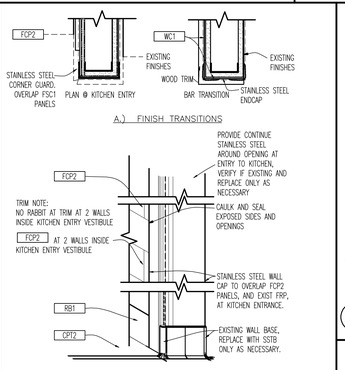

03 CRNR AT KITCH/BAR
SCALE: NTS

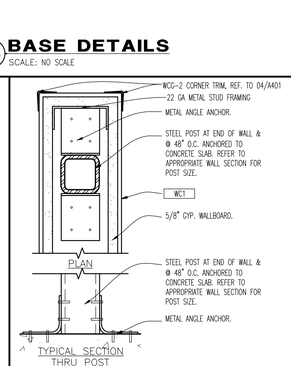

07 SEC. AT LOW WALL
SCALE: 3" = 1'-0"

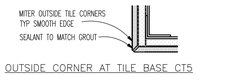

08 TYP BASE DET
SCALE: 3" = 1'-0"

INSTALL WC1, FURNISHED BY BWW VENDOR

INSTALL PREFINISHED WHITE MAPLE (WD1) WOOD, FURNISHED BY MILLWORK VENDOR.

PROVIDE LINEAR FOOT DIM TAKE-OFF OF WC1 AND NUMBER OF CORNER GUARDS FOR BWW TO PLACE ORDER. LEAD TIME IS 6 WEEKS FOR DELIVERY.

FASTEN MARMOLEUM PANELS WITH METAL SCREWS 2" BELOW OR ABOVE PANEL EDGE. WOOD TRIM TO CONCEAL SCREWS.

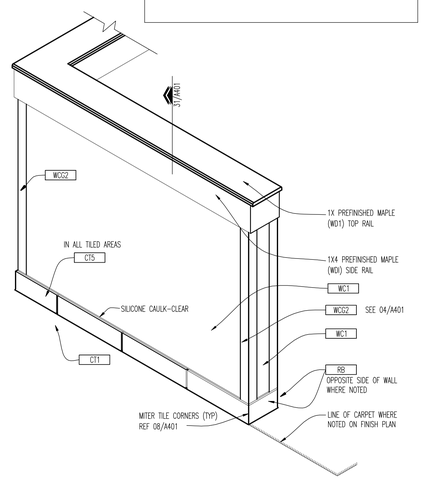

18 HALF WALL AXON-WALL TYPE "H"/"J"
SCALE:NTS

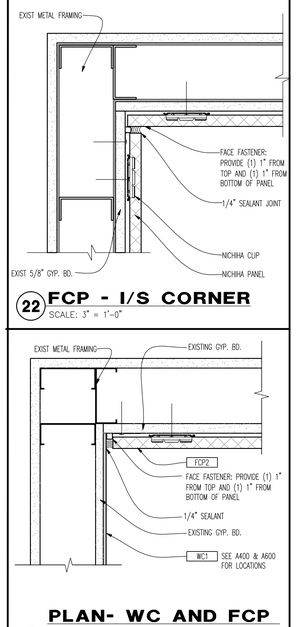

22 FCP - I/S CORNER
SCALE: 3" = 1'-0"

PLAN- WC AND FCP PANEL- I/S CORNER
SCALE: 3" = 1'-0"

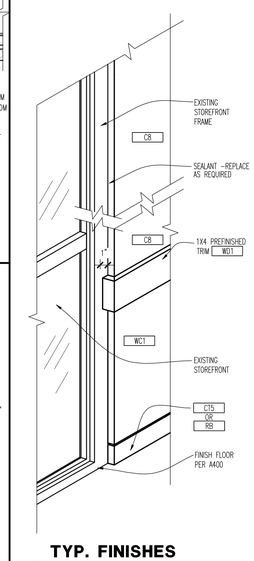

TYP. FINISHES AT WINDOW
SCALE: NTS

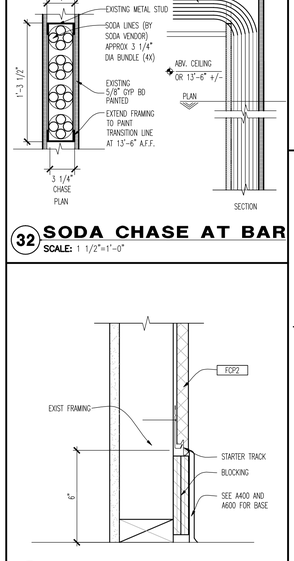

32 SODA CHASE AT BAR
SCALE: 1 1/2"=1'-0"

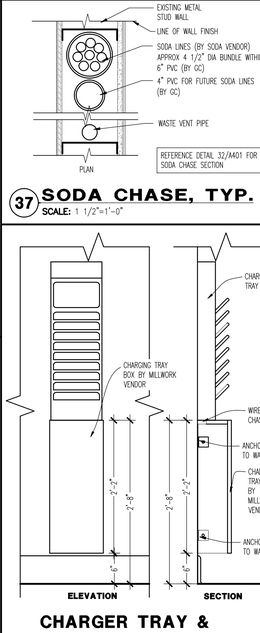

37 SODA CHASE, TYP.
SCALE: 1 1/2"=1'-0"

38 CHARGER TRAY & BOX MOUNTING
SCALE:1"=1'-0"

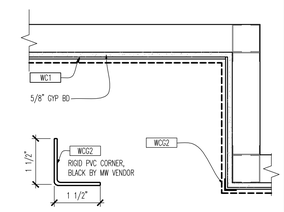

04 MARMOLEUM CORNER GUARD
SCALE:NTS

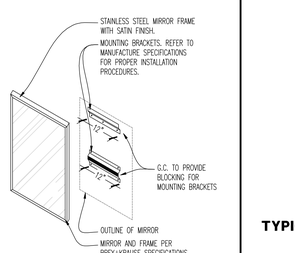

05 REMOVABLE MIRROR
SCALE:6"=1'-0"

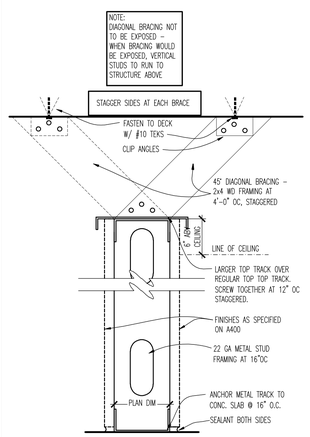

TYPICAL PARTITION A PLAN INDICATION

10 WALL TYPES
SCALE: 3"=1'-0"

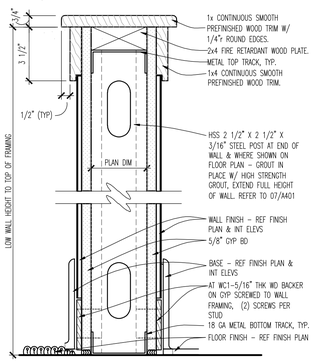

4'-0" LOW WALL H PLAN INDICATION

5'-0" LOW WALL J

4'-0" LOW WALL
5'-0" LOW WALL

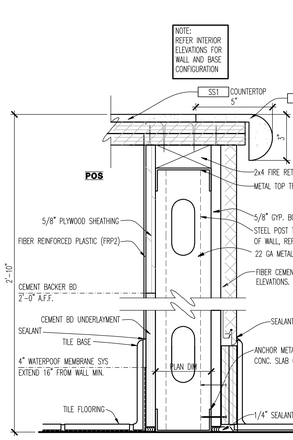

PARTIAL HEIGHT WALL AT TAKE OUT G PLAN INDICATION

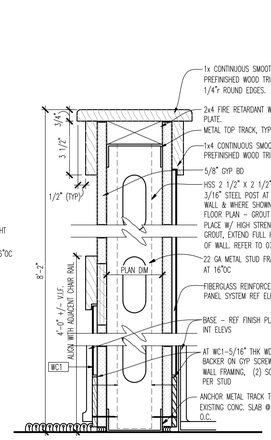

P PLAN INDICATION

8'-2" PARTIAL HEIGHT WALL

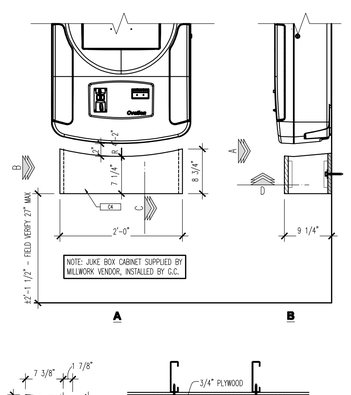

35 JUKE BOX MOUNTING
SCALE:1"=1'-0"

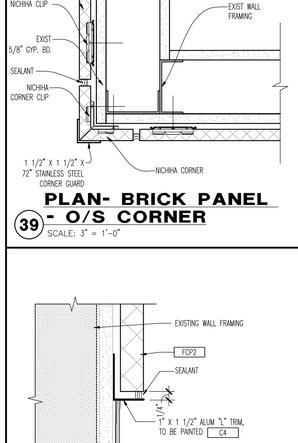

39 PLAN- BRICK PANEL - O/S CORNER
SCALE: 3" = 1'-0"

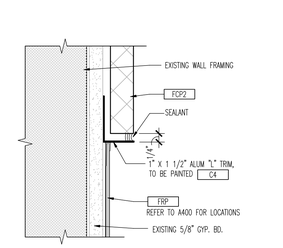

40 TRANSITION- FCP TO FRP
SCALE:6"=1'-0"

Intertech Design Services, Inc.
Architecture and Engineering
9435 Montgomery Rd.
Cincinnati, Ohio 45242
Phone: (513) 791-8888
Fax: (513) 792-7923
Web: www.intertechdesign.net

INTERTECH DESIGN SERVICES, INC. HAS EXERCISED REASONABLE SKILL AND JUDGMENT IN PROVIDING PROFESSIONAL SERVICES. INTERTECH DESIGN SERVICES, INC. IS NOT A GUARANTOR OF THE PROJECT TO WHICH ITS SERVICES ARE DIRECTED, AND ITS RESPONSIBILITY IS LIMITED TO WORK SPECIFICALLY PERFORMED FOR THE CLIENT. CONTRACTORS OF THE CLIENT OR THIRD PARTIES NOT UNDER THE DIRECT CONTROL OF INTERTECH DESIGN SERVICES, INC.

THIS DOCUMENT, AND THE IDEAS AND DESIGNS INCORPORATED HEREIN, AS AN INSTRUMENT OF PROFESSIONAL SERVICE, IS THE PROPERTY OF INTERTECH DESIGN SERVICES, INC. AND IS NOT TO BE USED, IN WHOLE OR IN PART, FOR ANY OTHER PROJECT, WITHOUT THE WRITTEN AUTHORIZATION OF INTERTECH DESIGN SERVICES, INC. © COPYRIGHT INTERTECH DESIGN SERVICES, INC., ALL RIGHTS RESERVED.

© COPYRIGHT INTERTECH DESIGN SERVICES, INC., 2015

BUFFALO WILD WINGS

CORPORATE - IN-LINE
TOWNE SOUTH PLAZA
3718 US HWY 41
TERRE HAUTE, IN 47802

DRAWING ISSUE

NO	DESCRIPTION	DATE
	70% CLIENT CHECKSET	11/25/15
	BID AND PERMIT	12/22/15

STAMP

12.22.2015

MISCELLANEOUS INTERIOR DETAILS

SCALE: AS NOTED

Drawn By: JJC Checked: ARC

PROJECT NUMBER
15-0124

SHEET NUMBER
A401

ORIGINAL PRINT SIZE - 30 X 42

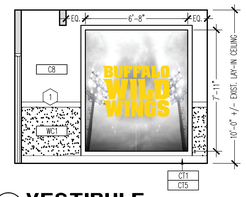

01 VESTIBULE
SCALE: 1/4"=1'-0"

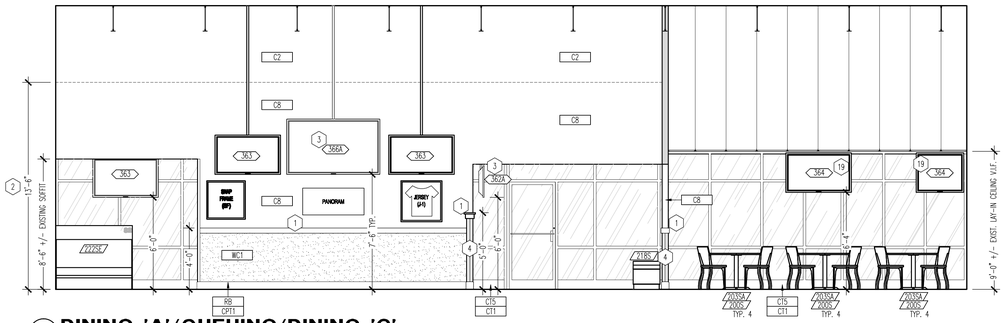

02 DINING 'A'/QUEUING/DINING 'C'
SCALE: 1/4"=1'-0"

GENERAL NOTES

1. REFER TO EQUIPMENT SCHEDULE ON SHEET EQ-2.
2. POSTERS, MENU BOARDS, FOOD PHOTOS, SPORTS DECOR PACKAGE AND GRAPHICS, PROVIDED BY BWW AND INSTALLED BY G.C.
3. ALL WOOD BLOCKING IS TO BE FIRE RETARDANT.
4. REFER TO FINISH TYPE SCHEDULE, ON SHEET EQ-2, FOR INFORMATION ON FINISHES.
5. G.C. TO FIELD VERIFY ALL DIMENSIONS PRIOR TO CONSTRUCTION/FABRICATION.
6. REFER TO SHEET EQ-1 AND EQ-2 FOR INDICATION OF EXISTING EQUIPMENT TO BE RELOCATED AS SHOWN. UNLESS NOTED, EQUIPMENT IS TO BE CONSIDERED EXISTING TO REMAIN.
7. ALL TELEVISIONS AND PROJECTION UNITS/SCREENS TO REMAIN UNLESS OTHERWISE NOTED. IF NEW, TV MONITORS AND YOKE, PROJECTORS AND SCREENS, AND SUSPENSION SYSTEM BY AV CONTRACTOR. TV'S TO BE MOUNTED AT 7'-6" AFF TO BOTTOM OF TV, DOUBLE HUNG TV'S TO BE MOUNTED AT 6'-6" AFF TO BOTTOM OF TV, UNLESS OTHERWISE NOTED ON DRAWINGS OR DIRECTED OTHERWISE BY OWNER. ALL TV'S ARE TO BE POLE MOUNTED UNLESS OTHERWISE NOTED. G.C. TO PROVIDE AND INSTALL BLOCKING AS REQUIRED.
8. "OPEN CEILING" AREA: ROOF JOIST, DECK, CONDUIT, ETC. PAINTED 'C2' AMAZING GRAY – DUCTWORK, STRUCTURAL BEAMS, A/V POLES AND HVAC EQUIPMENT PAINTED 'C3' IRON ORE.
9. UNLESS OTHERWISE NOTED, MARMOLEUM TO REMAIN ON WALLS WHERE IT IS EXISTING. COORDINATE WITH SHEET A400.
10. ALL WOOD WALL TRIM, WALL CAPS, WINDOW SILLS, ETC. IS TO BE NEW PREFINISHED WD1.
11. ALL EXISTING DECORE IS TO BE RETAINED AT DEMOLITION. COORDINATE NEW DECOR LAYOUT WITH BWW CM.

KEY NOTES

1. NEW 1x4 PREFINISHED WOOD CHAIR RAIL, MISCELLANEOUS TRIM, AND WALL CAPS ETC. TO BE PROVIDED AND INSTALLED THROUGHOUT.
2. FINISH TRANSITION TO ALIGN WITH EXISTING BAR SOFFIT, 13'-6"± A.F.F. REFER TO SHEET A400 FOR FURTHER INFORMATION. VERIFY HEIGHT AND CONDITION IN THE FIELD, TERMINATE AT FULL 18" PANEL WHERE POSSIBLE.
3. NEW LOCATION FOR RELOCATED EXISTING EQUIPMENT. G.C. IS RESPONSIBLE FOR RELOCATION AND FINAL CONNECTION. VERIFY CONDITION OF EQUIPMENT IN THE FIELD AND REPAIR WHEN NECESSARY.
4. NEW MARMOLEUM WAINSCOT REFER TO A400 AND EQ-2 FOR DETAILS. (ALL OTHER WC1 TO REMAIN.) INSTALL BLACK PVC CORNER GUARDS 'WCG2' AT ALL NEW MARMOLEUM CORNERS.
5. ALL MARMOLEUM WAINSCOT (WC1) TO BE REPLACED ON THE FRONT OF BAR DIE WALL, EXCLUDING CURVED PORTIONS OF WALL. REFER TO A400 FOR FURTHER INFORMATION.
6. STENCIL/VINYL GRAPHIC PROVIDED AND INSTALLED BY BWW VENDOR.
7. SST WALL END CAP OR CORNER GUARD TO BE INSTALLED FULL HEIGHT OF KITCHEN ENTRY WALLS, SERVER STATION WALLS, AND VERTICAL BRICK TO PAINT TRANSITIONS AT BULKHEADS. WOOD CHAIR RAIL TO TERMINATE AT SST.
8. G.C. TO PROVIDE AND INSTALL 18GA STAINLESS STEEL PANEL ON BACK BAR WALL BEHIND BEER TAPS BETWEEN NEW LIQUOR DISPLAYS. COORDINATE WITH SHEET EQ-1. TRIM WITH PREFINISHED 1X4 WOOD TRIM. INSTALL PRIOR TO BEER TAP REINSTALLATION.
9. G.C. TO PROVIDE AND INSTALL SST PANEL AT GLASS RACK AFTER COUNTERTOP AND FINISH REPLACEMENT.
10. NEW BACK BAR CABINETS. REFER TO DETAIL ON A703.
11. G.C. TO REINSTALL EXISTING COAT HOOKS SHOULD BE AT EVERY OTHER BAR STOOL (48" O.C.) AFTER FINISH REPLACEMENT.
12. ELECTRICAL OUTLETS ADDED AT BAR. COORDINATE WITH E100.
13. G.C. TO COORDINATE WITH MILLWORK VENDOR TO PROVIDE/ INSTALL ADA BUZZITIME BOX FOR RELOCATED BUZZITIME CHARGING STATION.
14. EXISTING DOOR AND FRAME TO BE PAINTED 'C4'. REFER TO A400 FOR FURHTER INFORMATION.
15. EXISTING EQUIPMENT TO REMAIN. STORE AS NECESSARY FOR CONSTRUCTION. RE–INSTALL WHEN WORK IS COMPLETE.
16. ALIGN TOP OF MURAL TRIM WITH BOTTOM OF ADJACENT BULKHEAD AS SHOWN.
17. REFER TO DETAIL 39/A401 FOR HORIZONTAL FINISH TRANSITION.
18. DOUBLE SIDED, BLADE MOUNTED RESTROOM SIGN. SIGN PROVIDED BY OWNER'S VENDOR. G.C. TO COORDINATE WITH VENDOR FOR PROPER INSTALLATION OF BLOCKING AND POWER.
19. HOLD TV'S TIGHT TO CEILING ABOVE. G.C. TO COORDINATE WITH AV VENDOR.
20. VERTICAL FINISH TRANSITION TO ALIGN WITH MERCHANDISER. 'C1' WALL FINISH TO BE CENTERED ON BACK WALL.
21. G.C. TO COORDINATE WITH EQUIPMENT VENDOR FOR EXACT LOCATION IN THE FIELD FOR ECOLAB EQUIPMENT ABOVE DISH MACHINE.
22. REFER TO 35/A401 FOR MILLWORK TO BE INSTALLED AT NEW JUKEBOX.

KEY PLAN

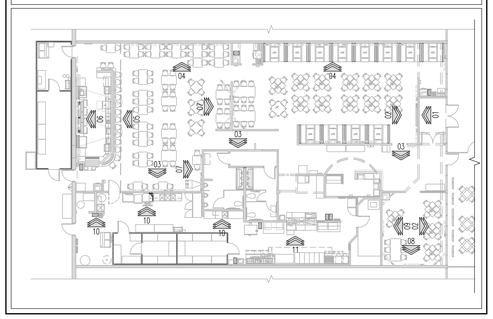

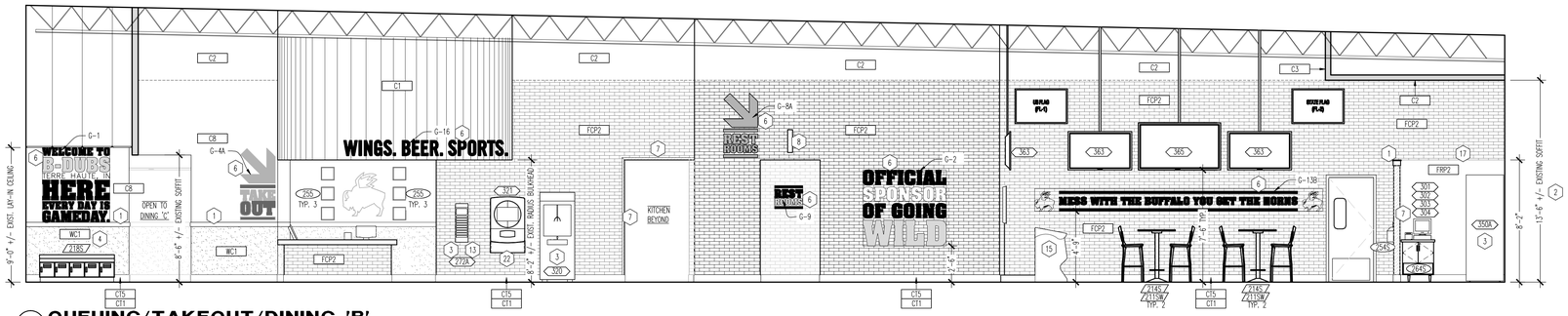

03 QUEUING/TAKEOUT/DINING 'B'
SCALE: 1/4"=1'-0"

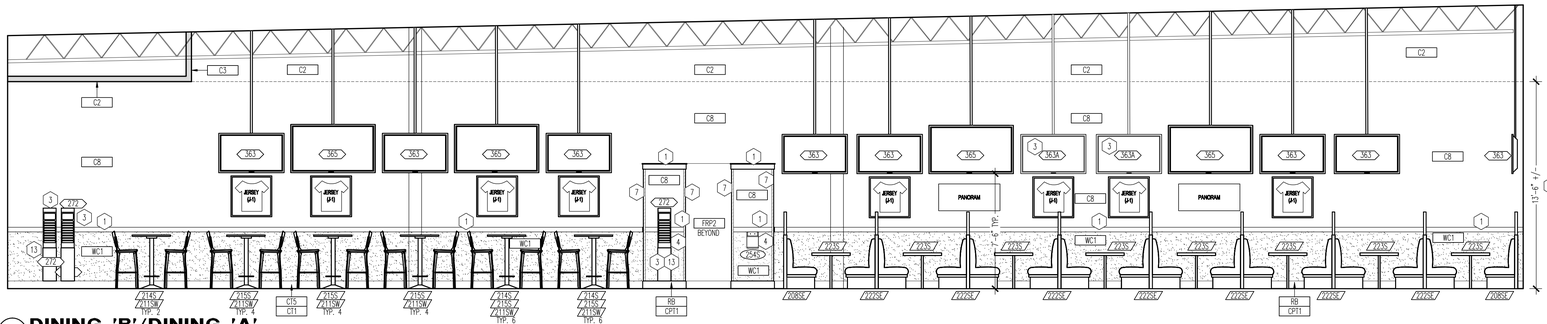

04 DINING 'B'/DINING 'A'
SCALE: 1/4"=1'-0"

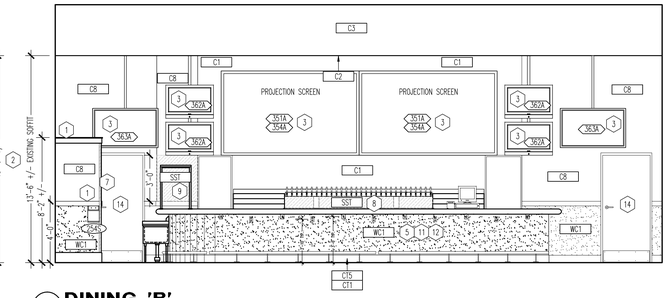

05 DINING 'B'
SCALE: 1/4"=1'-0"

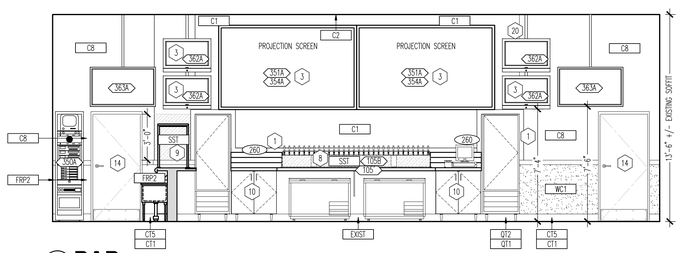

06 BAR
SCALE: 1/4"=1'-0"

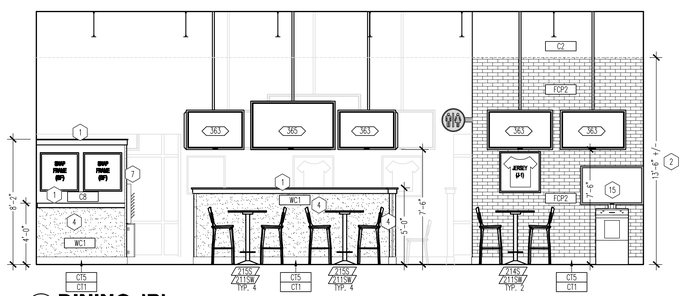

07 DINING 'B'
SCALE: 1/4"=1'-0"

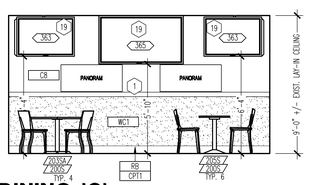

08 DINING 'C'
SCALE: 1/4"=1'-0"

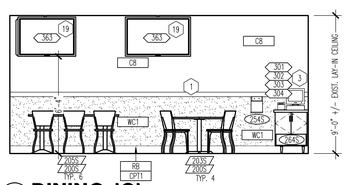

09 DINING 'C'
SCALE: 1/4"=1'-0"

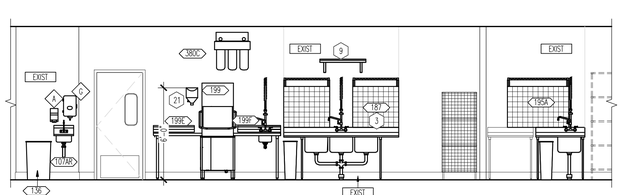

10 KITCHEN 'C'/ KITCHEN 'B'
SCALE: 1/4"=1'-0"

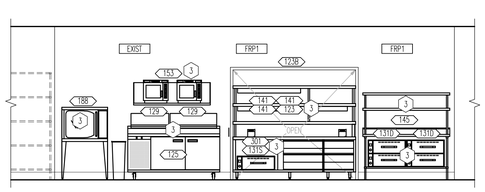

11 KITCHEN 'B'
SCALE: 1/4"=1'-0"

ORIGINAL PRINT SIZE – 30 X 42

Intertech Design Services, Inc.
Architecture and Engineering
9675 Montgomery Rd.
Cincinnati, Ohio 45242
Phone: (513) 791-8888
Fax: (513) 792-7923
Web: www.intertechdesign.net

INTERTECH DESIGN SERVICES, INC. HAS EXERCISED REASONABLE SKILL AND JUDGMENT IN PROVIDING PROFESSIONAL SERVICES. INTERTECH DESIGN SERVICES, INC. IS NOT A GUARANTOR OF THE PROJECT TO WHICH ITS SERVICES ARE DIRECTED, AND ITS RESPONSIBILITY IS LIMITED TO WORK SPECIFICALLY PERFORMED FOR THE CLIENT, CONTRACTORS OF THE CLIENT, OR THIRD PARTIES NOT UNDER THE DIRECT CONTROL OF INTERTECH DESIGN SERVICES, INC.

THIS DOCUMENT, AND THE IDEAS AND DESIGNS INCORPORATED HEREIN, AS AN INSTRUMENT OF PROFESSIONAL SERVICE, IS THE PROPERTY OF INTERTECH DESIGN SERVICES, INC. AND IS NOT TO BE USED, IN WHOLE OR IN PART, FOR ANY OTHER PROJECT, WITHOUT THE WRITTEN AUTHORIZATION OF INTERTECH DESIGN SERVICES, INC. ALL RIGHTS RESERVED.

© COPYRIGHT INTERTECH DESIGN SERVICES, INC., 2015

BUFFALO WILD WINGS

CORPORATE – IN-LINE
TOWNE SOUTH PLAZA
3718 US HWY 41
TERRE HAUTE, IN 47802

DRAWING ISSUE

NO	DESCRIPTION	DATE
	70% CLIENT CHECKSET	11/25/15
	BID AND PERMIT	12/22/15

STAMP

12.22.2015

INTERIOR ELEVATIONS

SCALE: 1/4" = 1'-0"

Drawn By LJC Checked RKG

PROJECT NUMBER
15-0124

SHEET NUMBER
A600

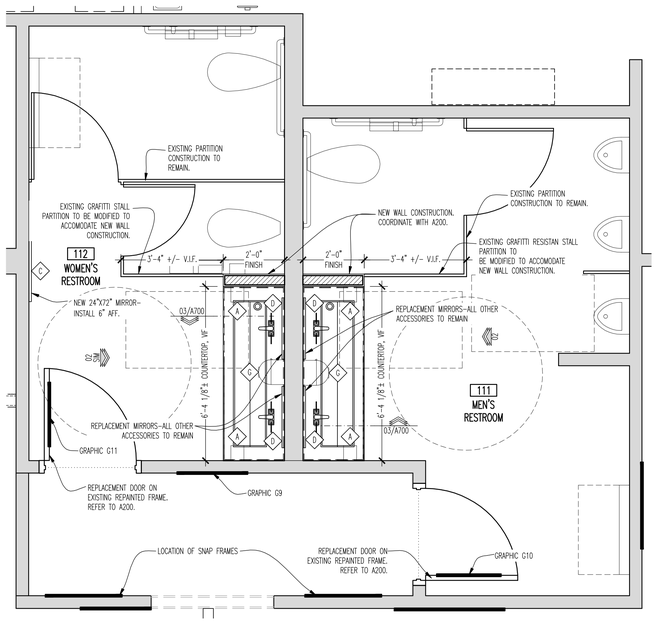

01 PLAN
SCALE: 1/2"=1'-0"

◇ TOILET ACCESSORIES ◇

MARK	DESCRIPTION	SUPPLIED BY	INSTALLED BY	REMARKS
A	HAND SOAP DISPENSER	GC	GC	3
C	24"W x 72"H TEMP GLASS MIRROR	GC	GC	1,2
D	24"W X 36"H TEMP GLASS MIRROR	GC	GC	1,2
G	PAPER TOWEL DISPENSER	GC	GC	3
	SEE FIXTURE PLAN ON EQ-1 AND BAR DETAILS ON A701 FOR ADDITIONAL ACCESSORIES.			

REMARKS

1. MIRROR WITH SST FRAME. PART OF HARDWARE PACKAGE, REF 05/A401.
2. PURCHASED THROUGH TWIN CITY HARDWARE AS PART OF HARDWARE PACKAGE.
3. VERIFY CONDITION IN THE FIELD AND REPLACE AS REQUIRED WITH EQUAL.

GENERAL NOTES

1. REFER TO SHEET A400 FOR FINISH UPDATE INSTRUCTIONS THROUGHOUT ALCOVE AND RESTROOMS.
2. EXISTING CEILING TO BE PAINTED 'C2' AMAZING GREY.
3. G.C IS RESPONSIBLE FOR VERIFYING ALL DIMENSIONS PRIOR TO ORDERING AND FABRICATION OF ITEMS.
4. ALL TILE TO BE PATCHED AND REPAIRED WITH OWNER PROVIDED MATERIALS. SALVAGED DURING DEMOLITION.
5. G.C. IS RESPONSIBLE FOR RESEALING ALL EXISTING PLUMBING FIXTURES.
6. ALL EXISTING BEECH WOOD TRIM TO BE REMOVED AND REPLACED WITH PREFINISHED 1X4 TRIM.

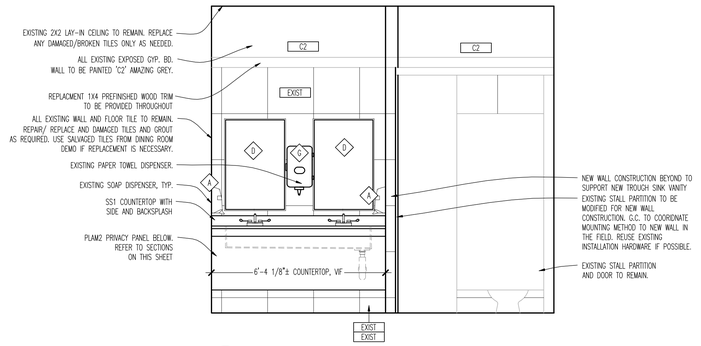

02 ELEVATION
SCALE: 1/2"=1'-0"

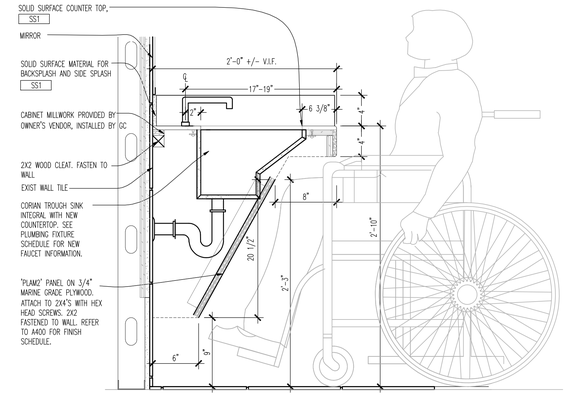

03 VANITY SECTION
SCALE: 1 1/2"=1'-0"

Intertech Design Services, Inc.
Architecture and Engineering
9675 Montgomery Rd.
Cincinnati, Ohio 45242
Phone: (513) 791-8888
Fax: (513) 792-7923
Web: www.intertechdesigninc.net

INTERTECH DESIGN SERVICES, INC. HAS EXERCISED REASONABLE SKILL AND JUDGMENT IN PROVIDING PROFESSIONAL SERVICES. INTERTECH DESIGN SERVICES, INC. IS NOT A GUARANTOR OF THE PROJECT TO WHICH ITS SERVICES ARE DIRECTED, AND ITS RESPONSIBILITY IS LIMITED TO WORK SPECIFICALLY PERFORMED FOR THE CLIENT, CONTRARY TO THE CLIENT'S NOTIONS IT IS NOT UNDER THE DIRECT CONTROL OF INTERTECH DESIGN SERVICES, INC.

THIS DOCUMENT, AND THE IDEAS AND DESIGNS INCORPORATED HEREIN, AS AN INSTRUMENT OF PROFESSIONAL SERVICE, IS THE PROPERTY OF INTERTECH DESIGN SERVICES, INC. AND IS NOT TO BE USED, IN WHOLE OR IN PART, FOR ANY OTHER PROJECT, WITHOUT THE WRITTEN AUTHORIZATION OF INTERTECH DESIGN SERVICES, INC. ANY REUSE WITHOUT WRITTEN VERIFICATION OR ADAPTATION BY INTERTECH DESIGN SERVICES, INC. WILL BE AT RECIPIENT'S SOLE RISK AND WITHOUT LIABILITY TO INTERTECH DESIGN SERVICES, INC. ALL RIGHTS RESERVED.
© COPYRIGHT INTERTECH DESIGN SERVICES, INC. 2015

BUFFALO WILD WINGS

CORPORATE - IN-LINE
TOWNE SOUTH PLAZA
3718 US HWY 41
TERRE HAUTE, IN 47802

DRAWING ISSUE

NO	DESCRIPTION	DATE
	70% CLIENT CHECKSET	11/25/15
	BID AND PERMIT	12/22/15

STAMP

12.22.2015

ENLARGED RESTROOM PLAN AND ELEVATIONS

SCALE: AS NOTED

Drawn By GTW Checked ARC

PROJECT NUMBER
15-0124

SHEET NUMBER
A700

ORIGINAL PRINT SIZE - 30 X 42

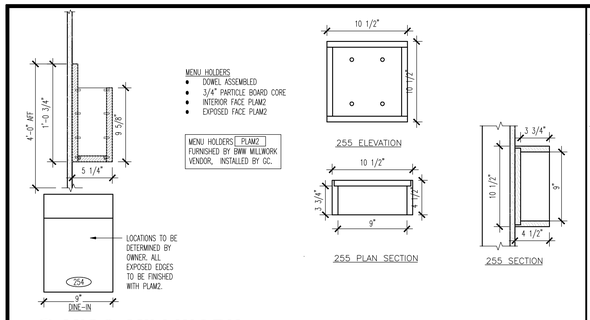

01 MISC MILLWORK
SCALE: 1 1/2"=1'-0"

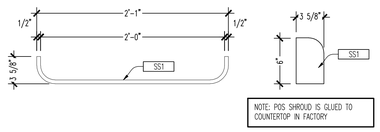

02 POS SHROUD
SCALE: 1-1/2"=1'-0"

03 POS CABINET
SCALE: 1 1/2"=1'-0"

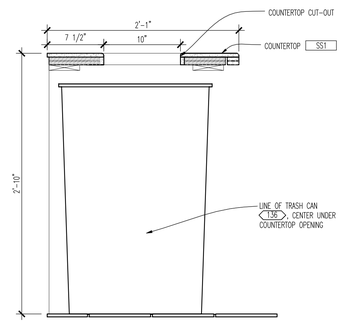

04 TRASH CUT OUT CONTERTOP
SCALE: 1 1/2"=1'-0"

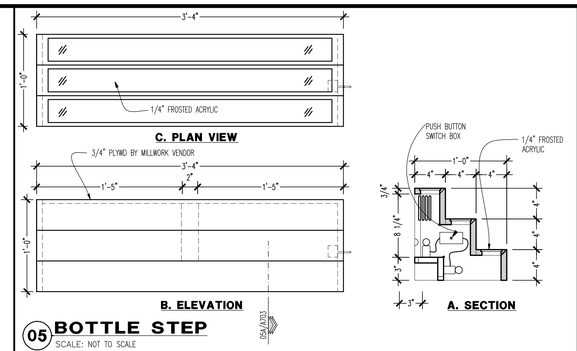

05 BOTTLE STEP
SCALE: NOT TO SCALE

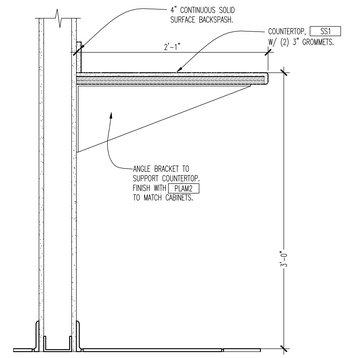

06 COUNTERTOP AT SERVER STATIONS
SCALE: 1 1/2"=1'-0"

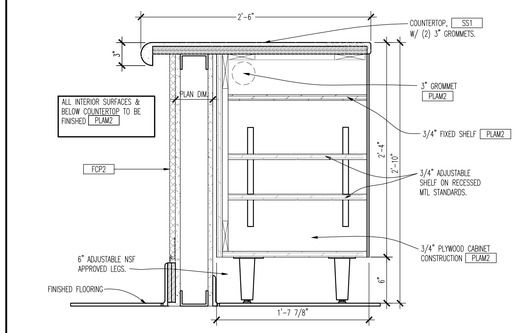

07 TAKE OUT COUNTER
SCALE: 1 1/2"=1'-0"

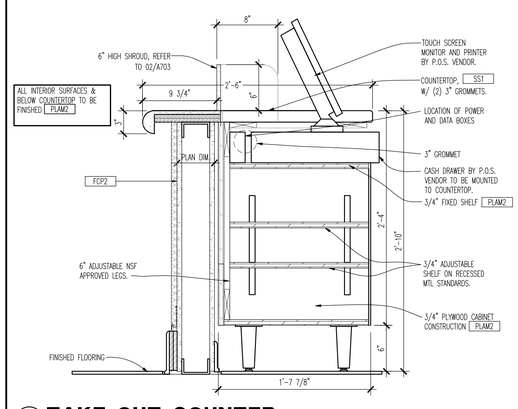

08 TAKE OUT COUNTER
SCALE: 1 1/2"=1'-0"

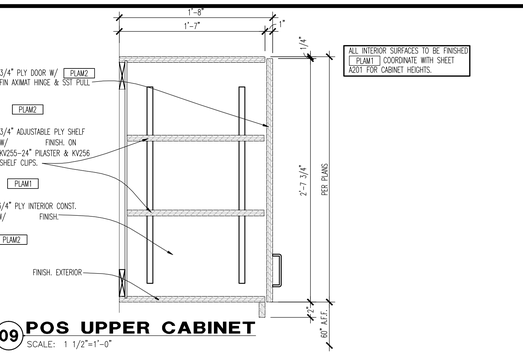

09 POS UPPER CABINET
SCALE: 1 1/2"=1'-0"

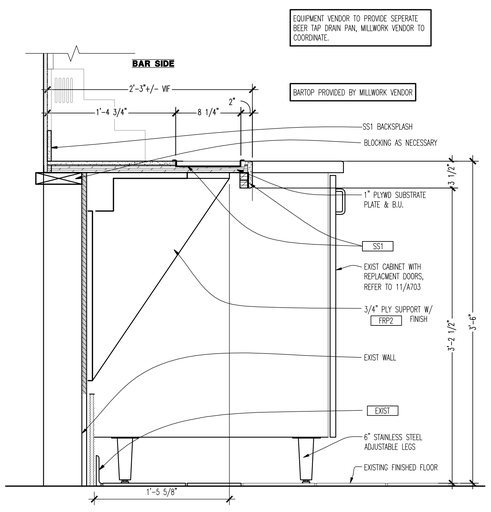

10 BACK BAR
SCALE: 1-1/2"=1'-0"

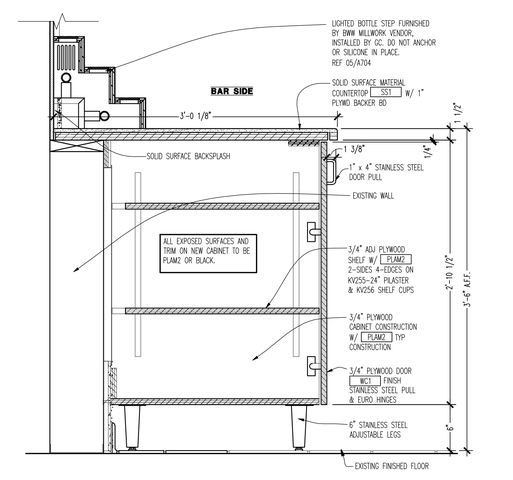

11 BACK BAR
SCALE: 1-1/2"=1'-0"

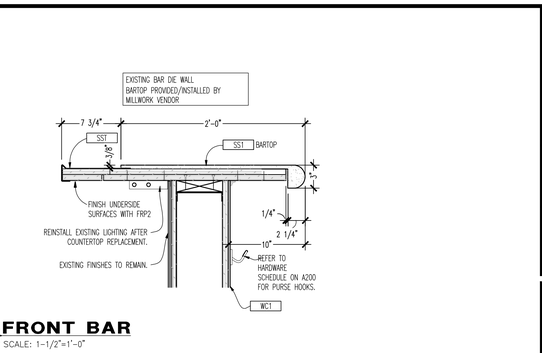

12 FRONT BAR
SCALE: 1-1/2"=1'-0"

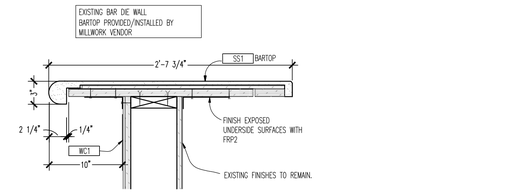

13 FRONT BAR
SCALE: 1-1/2"=1'-0"

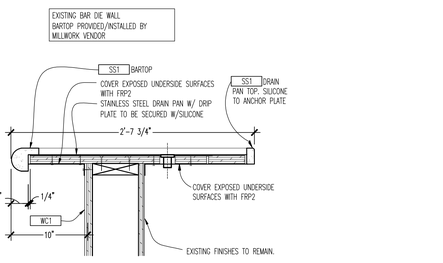

14 FRONT BAR/DRAIN PAN
SCALE: 1-1/2"=1'-0"

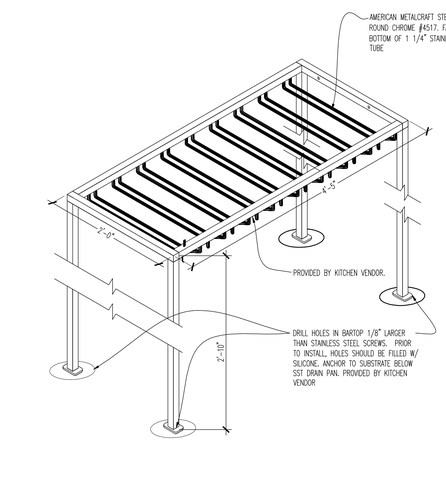

35 GLASS RACK
SCALE: 1"=1'-0"

ORIGINAL PRINT SIZE - 30 X 42

Intertech Design Services, Inc.
Architecture and Engineering
9675 Montgomery Rd.
Cincinnati, Ohio 45242
Phone: (513) 791-8888
Fax: (513) 792-7923
Web: www.intertechdesign.net

INTERTECH DESIGN SERVICES, INC. HAS EXERCISED REASONABLE SKILL AND JUDGMENT IN PROVIDING PROFESSIONAL SERVICES. INTERTECH DESIGN SERVICES, INC. IS NOT A GUARANTOR OF THE PROJECT TO WHICH ITS SERVICES ARE DIRECTED, AND ITS RESPONSIBILITY IS LIMITED TO WORK SPECIFICALLY PERFORMED FOR THE CLIENT, OWNERS OF THE CLIENT, NOR THIRD PARTIES NOT UNDER THE DIRECT CONTROL OF INTERTECH DESIGN SERVICES, INC.

THIS DOCUMENT, AND THE IDEAS AND DESIGNS INCORPORATED HEREIN, AS AN INSTRUMENT OF PROFESSIONAL SERVICE, IS THE PROPERTY OF INTERTECH DESIGN SERVICES, INC. AND IS NOT TO BE USED, IN WHOLE OR IN PART, FOR ANY OTHER PROJECT, WITHOUT THE WRITTEN AUTHORIZATION OF INTERTECH DESIGN SERVICES, INC. © COPYRIGHT INTERTECH DESIGN SERVICES, INC. ALL RIGHTS RESERVED.
© COPYRIGHT INTERTECH DESIGN SERVICES, INC. 2015

BUFFALO WILD WINGS

CORPORATE - IN-LINE
TOWNE SOUTH PLAZA
3718 US HWY 41
TERRE HAUTE, IN 47802

DRAWING ISSUE

NO	DESCRIPTION	DATE
	70% CLIENT CHECKSET	11/25/15
	BID AND PERMIT	12/22/15

STAMP

12.22.2015

MILLWORK DETAILS

SCALE: AS NOTED
Drawn By LJC Checked RKG

PROJECT NUMBER
15-0124

SHEET NUMBER
A703

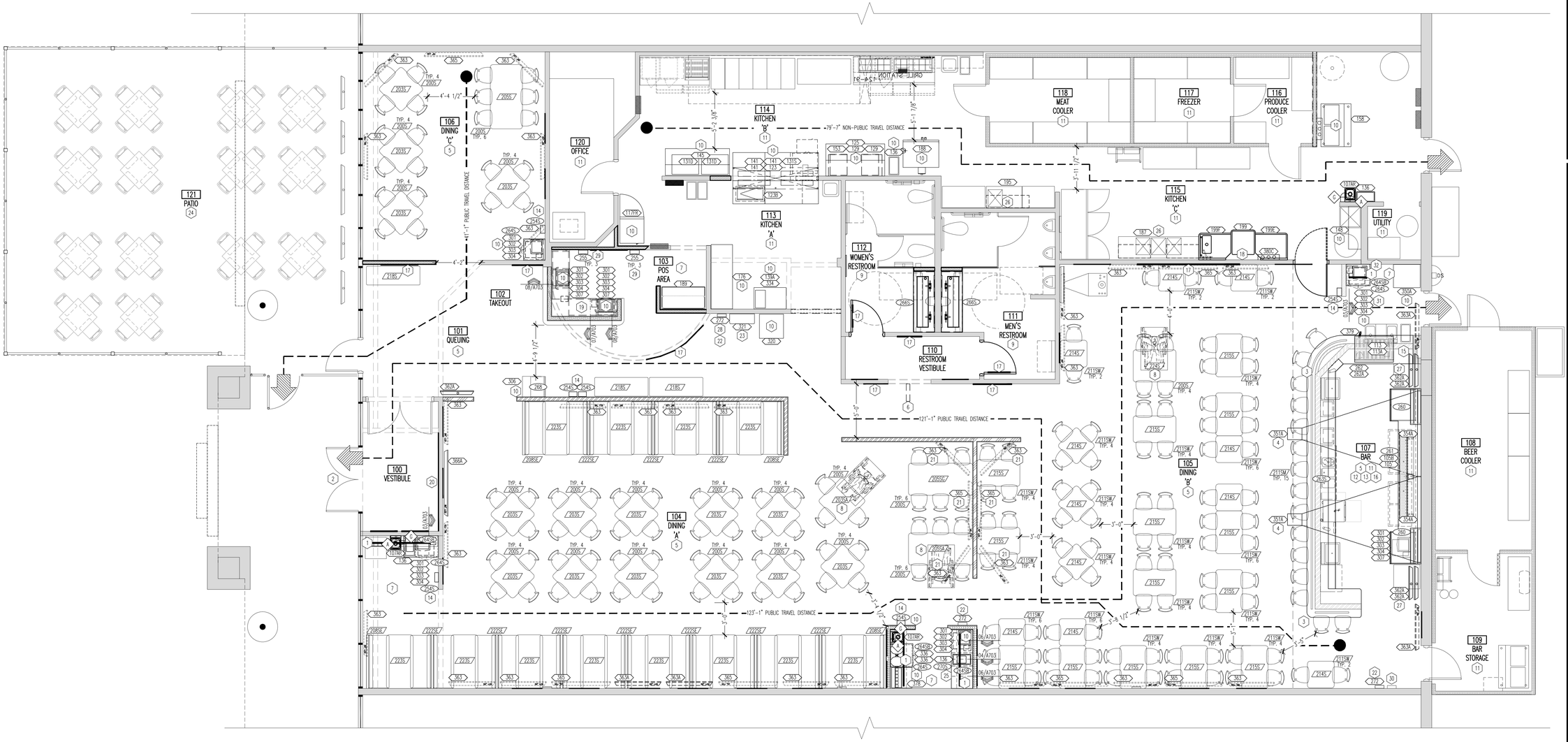

01 EQUIPMENT PLAN
SCALE: 1/4"=1'-0"

TRAVEL DISTANCE

LONGEST TRAVEL DISTANCE PER PLAN:	ALLOWABLE TRAVEL DISTANCE PER CODE:
KITCHEN AREA: 79'-7"	KITCHEN AREA: 200'-0"
DINING AREA: 123'-1"	DINING AREA: 200'-0"

REQUIRED MINIMUM DISTANCE BETWEEN EXITS = 1/3 DIAGONAL DISTANCE OF AREA SERVED, PER IBC: 115'-4" / 3 = 38'-5" MIN. DISTANCE BETWEEN EXITS
= 101'-0" DISTANCE BETWEEN EXITS PROVIDED

SYMBOL LEGEND

(#) FURNISHINGS (#) EQUIPMENT (#) MILLWORK ◇# SINK ACCESSORIES

SINK ACCESSORIES

MARK	DESCRIPTION	REMARKS
A	HAND SOAP DISPENSER BY OWNER	1
G	PAPER TOWEL DISPENSER BY OWNER	2
	RESTROOM DETAILS-SEE A700	

REMARKS

1. SOAP DISPENSER MOUNTED AT 44" AFF TO CENTERLINE OF DISPENSING UNIT. INSTALLED BY OWNER.
2. PAPER TOWEL DISPENSER MOUNTED AT 44" AFF TO BOTTOM OF PAPER TOWEL SLOT. INSTALLED BY GC.

SEAT COUNT

AREA	SEATS PER AREA
DINING 'A'	108
DINING 'B'	103
DINING 'C'	22
PATIO	56 (EXIST)
SEATING TOTAL	289

KEY NOTES

1. UNDER CABINET LIGHTING TO BE INSTALLED ON SERVER STATION UPPER CABINETS (EXISTING AND NEW). COORDINATE WITH ELECTRICAL SHEETS.
2. G.C. TO COORDINATE WITH ELECTRICAL CONTRACTOR TO VERIFY OR RELOCATE HARD WIRED DOOR BELL AT FRONT ENTRY. PROVIDE ONE IF IT DOES NOT EXIST.
3. G.C. TO INSTALL NEW BAR FOOT RAIL AND ADD OUTLETS AT PATRON SIDE OF BAR DIE WALL. COORDINATE WITH ELECTRICAL SHEETS AND SHEET A200. EXISTING COAT HOOKS TO BE REINSTALLED AFTER FINISH REPLACEMENT.
4. RELOCATED PROJECTOR UNITS TO CENTER ON BAR. ALL PROJECTORS TO BE SUSPENDED FROM ROOF JOISTS PER MANUFACTURER'S SPECIFICATIONS WITH THREADED ROD AND UNISTRUT AS NEEDED. REFER TO INTERIOR ELEVATIONS FOR HEIGHTS. ALL RELATED MATERIALS TO BE SUPPLIED AND INSTALLED BY A/V CONTRACTOR. G.C. TO COORDINATE.
5. REFER TO SHEET A600 FOR TV HEIGHTS.
6. SIGN VENDOR TO PROVIDE AND INSTALL NEW DOUBLE SIDED RESTROOM SIGN. G.C. TO VERIFY NECESSARY ELECTRIC AND BLOCKING ARE PROVIDED.
7. REFERENCE ENLARGED PLANS, ELEVATIONS & DETAILS ON SHEET A201.
8. FURNITURE VENDOR TO ENSURE TABLE MEETS ADA GUIDELINES.
9. NEW VANITY COUNTERTOPS, MIRRORS, SINKS, AND FAUCETS IN RESTROOMS. ALL EXISTING TOILETS AND URINALS, AND TOILET ACCESSORIES TO REMAIN UNLESS OTHERWISE NOTED. ALL TOILETS AND URINALS TO BE RESEALED. REFER TO SHEET A700 FOR ADDITIONAL INFORMATION. COORDINATE WITH PLUMBING SHEET.
10. NEW LOCATION FOR EXISTING EQUIPMENT. VENDOR RESPONSIBLE FOR RELOCATION. G.C. TO ENSURE ALL ELECTRICAL AND/ DATA REQUIREMENTS ARE MAINTAINED FOR NEW LOCATION OF EQUIPMENT. EQUIPMENT TO BE INSPECTED AND BROUGHT TO A LIKE-NEW CONDITION.
11. ALL EXISTING EQUIPMENT TO REMAIN UNLESS NOTED OTHERWISE ON THIS PLAN. RE-INSTALL IN PREVIOUS LOCATIONS IF REMOVAL WAS NECESSARY FOR NEW FINISH OR WALL CONSTRUCTION INSTALLATION WHERE APPLICABLE. REFER TO SHEET A400 FOR ADDITIONAL INFORMATION.
12. G.C. TO PROVIDE AND INSTALL 20 GA-SST PANEL BEHIND EXISTING BEER TAPS PRIOR TO REINSTALLATION. HEIGHT TO ALIGN WITH TRIM AT NEW LIQUOR DISPLAYS. VERIFY IN THE FIELD AND COORDINATE WITH SHEET A600.
13. NEW FRONT AND BACK BAR COUNTERTOP AND BACK BAR CABINETS. VERIFY DIMENSIONS IN THE FIELD. COORDINATE WITH SHEET A400 AND A703. EQUIPMENT VENDOR TO COORDINATE WITH G.C. FOR ANY EQUIPMENT THAT REQUIRES REINSTALLATION AFTER TEMPORARY REMOVAL FOR FRONT AND BACK BAR COUNTERTOP INSTALLATION AND BEER TAP REINSTALLATION. BACK BAR TO HAVE VENDOR PROVIDED DROP-IN DRIP PAN AT GLASS RACK AND BEER TAPS.
14. COORDINATE LOCATION OF MENU HOLDERS WITH OWNER PRIOR TO INSTALLATION.
15. FREE STANDING GLASS RACK TO BE REINSTALLED AFTER INSTALLATION OF NEW BAR COUNTERTOP. G.C. TO PROVIDE AND INSTALL 36" HIGH STAINLESS STEEL PANEL BEHIND GLASS RACK. REPLACE AS REQUIRED. VERIFY CONDITION IN THE FIELD. REFER TO 15/A703. FOR DETAIL.
16. RECONNECT EXISTING 30 TAP BEER SYSTEM TO EXISTING BEER LINES/ SYSTEM AFTER COMPLETION OF COUNTERTOP REPLACEMENT. NEW DRAIN PAN TO BE INSTALLED WITH NEW COUNTERTOP. MILLWORK VENDOR TO COORDINATE WITH EQUIPMENT VENDOR.
17. LOCATION FOR OWNER PROVIDED STENCIL/ GRAPHIC. COORDINATE WITH A400 AND A600 FOR GRAPHICS AND DECOR INFORMATION.
18. REFER TO SHEET A600 FOR INSTALLATION HEIGHTS OF ECOLAB EQUIPMENT ASSOCIATED WITH NEW DISHMACHINE.
19. G.C. TO COORDINATE WITH STORE SECURITY COMPANY PRIOR TO SHUT DOWN ABOUT RE-INSTALL / CONNECTION OF PANIC BUTTON ONCE NEW TAKE-OUT COUNTER MILLWORK IS IN PLACE.
20. LOCATION FOR OWNER PROVIDED AND G.C. INSTALLED CUSTOM WALLCOVERING. G.C. TO PROVIDE AND INSTALL 1X4 TRIM FRAME. REFER TO DETAIL 21/A401. SIZE OF WALLCOVERING TO BE 6'-8" W X 7'-11" H.
21. POLE MOUNT INDICATED TELEVISIONS FROM STRUCTURE BACK TO BACK.
22. LOCATIONS FOR RELOCATED BUZZTIME CHARGING STATION. G.C. TO VERIFY BLOCKING, AND PROVIDE IF CONDITIONS ARE NOT ADEQUATE.
23. REPLACEMENT JUKEBOX SHOWN IN RELOCATED POSITION. ENSURE PROPER BLOCKING, DATA AND POWER CONNECTION. COORDINATE WITH ELECTRICAL SHEETS. REFER TO 35/A401 FOR ASSOCIATED MILLWORK.
24. ALL EXISTING EQUIPMENT AND FURNITURE AT PATIO TO REMAIN.
25. HIGH CHAIR STORAGE LOCATED BELOW COUNTERTOPS AT SERVER STATION.
26. G.C. TO COORDINATE RELOCATION OF EXISTING WALL MOUNTED SHELVING ABOVE SINKS TO ACCOMODATE SMART WALL SYSTEM INSTALLATION.
27. EXISTING TV TO BE REMOUNTED ON DOUBLE STACK POLE IN SIMILAR WALL LOCATION.
28. PROVIDE ADA BOX FOR EXISTING BUZZTIME CHARGING STATION. RELOCATE POWER AS REQUIRED.
29. REFER TO SHEET A201 FOR PLACEMENT OF SAUCE DISPLAYS.
30. LOCATION OF EXISTING BUXX TIME CHARGING STATION.
31. G.C. TO COORDINATE WITH MILLWORK VENDOR TO ENSURE INDICATED CABINETS ABOVE AND POS CABINET BELOW ARE LOCKABLE.
32. INDICATED UPPER CABINET TO HAVE LOCKING HARDWARE.

GENERAL NOTES

1. KITCHEN EQUIPMENT SUPPLIER SHALL SET IN PLACE ALL KITCHEN AND BAR EQUIPMENT, AND REMOVE OLD. KITCHEN EQUIPMENT VENDOR IS RESPONSIBLE FOR CONNECTING CONTROL WIRING. G.C. IS RESPONSIBLE FOR ALL OTHER FINAL ELECTRICAL AND PLUMBING CONNECTIONS TO EQUIPMENT.
2. EQUIPMENT VENDOR TO FIRMLY ANCHOR ANY FURNITURE OR EQUIPMENT WHICH IS REQUIRED TO BE FIXED. CAULK AND SEAL TO WALLS AND FLOOR.
3. TV MONITORS AND YOKE, PROJECTORS AND SCREENS, AND SUSPENSION SYSTEM BY AV CONTRACTOR. TV'S TO BE POLE MOUNTED AT 7'-6" AFF TO BOTTOM OF TV, UNLESS OTHERWISE NOTED ON DRAWINGS OR DIRECTED OTHERWISE BY OWNER. DOUBLE HUNG TV'S TO BE MOUNTED AT 6'-6" A.F.F. TO BOTTOM OF TV WITH 6" IN BETWEEN, UNLESS OTHERWISE NOTED ON DRAWINGS OR DIRECTED OTHERWISE BY OWNER. ALL TV'S ARE TO BE POLE MOUNTED UNLESS OTHERWISE NOTED. G.C. TO PROVIDE AND INSTALL BLOCKING AS REQUIRED. PROJECTORS AND SCREENS TO BE SUSPENDED FROM ROOF JOISTS WITH THREADED ROD AND UNISTRUT. SEE SHEET A600 INTERIOR ELEVATIONS FOR HEIGHTS. COORDINATE POWER FOR PROJECTORS WITH ELECTRICAL CONTRACTOR.
4. SEE THIS SHEET, INTERIOR ELEVATIONS, ENLARGED PLANS AND ELEVATIONS, AND ELECTRICAL DRAWINGS FOR POS AREA AND SERVER STATION EQUIPMENT LAYOUTS.
5. INSTALL MENU BOXES AT LOCATIONS DETERMINED BY OWNER. VERIFY IN THE FIELD.
6. 3" GROMMET IN COUNTERTOP AT MONITORS, PRINTERS, ETC. COORDINATE EXACT LOCATION WITH OWNER.
7. ACCESSIBLE TABLES TO BE PROVIDED WHERE SHOWN ON PLAN WITH H/C SYMBOL
8. SELF SERVICE SHELVES AND DISPENSING DEVICES FOR TABLEWARE, DISHWARE, CONDIMENTS, FOOD AND BEVERAGES SHALL NOT BE MORE THAN 54" AFF, NOT LESS THAN 9" AFF AND ACCESSIBLE FROM WITHIN 25" FROM EDGE OF COUNTER.
9. KITCHEN VENDOR TO INCLUDE RECHARGING OF ALL EXISTING REFRIGERATION LINES.
10. ALL BWW VENDORS (INCLUDING BUT NOT LIMITED TO EQUIPMENT, A/V, POS AND SODA) ARE TO COORDINATE REMOVAL, RELOCATION, REPLACEMENT AND/OR SERVICING OF EXISTING EQUIPMENT WITH BUFFALO WILD WINGS CM.
11. G.C. IS RESPONSIBLE FOR A FULL CLEANING OF ENTIRE RESTAURANT PRIOR TO TURN OVER.
12. G.C. IS RESPONSIBLE TO HANG ALL BWW SUPPLIED DECOR. COORDINATE FINAL LOCATION IN THE FIELD. OWNERS VENDOR TO SUPPLY AND INSTALL GRAPHICS
13. G.C. TO PROVIDE AND INSTALL ALL ADA SIGNS AND OCCUPANCY SIGNS REQUIRED BY LOCAL CODE, AS NECESSARY.
14. A/V VENDOR IS RESPONSIBLE FOR COORDINATION OF REINSTALLATION OF TVS AS REQUIRED FOR NEW LAYOUT. COORDINATE WITH CONSTRUCTION MANAGER. TVS ARE TO BE BAGGED DURING CONSTRUCTION EVEN IF TV IS TO REMAIN IN EXISTING LOCATION. G.C. IS RESPONSIBLE FOR BAGGING.
15. ALL PUBLIC VISIBLE ELECTRICAL OUTLETS AND OUTLET COVERS ARE TO BE UPGRADED TO BLACK IF NOT ALREADY.
16. VERIFY IN THE FIELD ALL EXISTING EMERGENCY LIGHTING AND EXIT SIGNAGE. PROVIDE NEW, OR RELOCATE AS NECESSARY TO ACCOMMODATE NEW LAYOUT AS SHOWN PRIOR TO SHUTDOWN. ASSURE THAT DIRECTIONAL SIGNAGE HAS BEEN MODIFIED FOR REVISED EGRESS PATHS, IF NECESSARY. VERIFY/INSTALL EMERGENCY LIGHTS SUCH THAT THEY DO NOT INTERFERE WITH WALL DECOR AND TV PROJECTION SCREENS. REFER TO ELECTRICAL SHEETS AND INTERIOR ELEVATIONS FOR ADDITIONAL INFORMATION. G.C. TO VERIFY WORKING CONDITION PRIOR TO SHUT DOWN.
17. NEW TV'S TO BE ON RELOCATED/ EXISTING TV MOUNTING POLES, WHERE AVAILABLE OR APPLICABLE – INTERCEPT AND EXTEND EXISTING 120V CIRCUITRY TO NEW LOCATION – EXISTING SIGNAL CIRCUITRY TO BE REPLACED FROM TELEVISION TO A/V RACK.
18. REFER TO SCHEDULE ON THIS SHEET FOR SINK ACCESSORIES.
19. UNLESS OTHERWISE INDICATED ON THIS SHEET OR IS NOTED OTHERWISE WITH EQUIPMENT TAG, ALL A/V IS TO REMAIN IN EXISTING LOCATION. G.C. TO TEMPORARILY BAG DURING CONSTRUCTION. A/V VENDOR TO HANDLE REINSTALLATION AND RELOCATION IN NEW LAYOUT.
20. REFER TO A400 AND A600 FOR DECOR/GRAPHICS PLACEMENT.
21. REFER TO SHEET EQ-2 FOR EQUIPMENT AND A/V SCHEDULES.

ORIGINAL PRINT SIZE – 30 X 42

Intertech Design Services, Inc.
Architecture and Engineering
9675 Montgomery Rd.
Cincinnati, Ohio 45242
Phone: (513) 791-8888
Fax: (513) 792-7923
Web: www.intertechdesign.net

INTERTECH DESIGN SERVICES, INC. HAS EXERCISED REASONABLE SKILL AND JUDGMENT IN PROVIDING PROFESSIONAL SERVICES. INTERTECH DESIGN SERVICES, INC. IS NOT A GUARANTOR OF THE PROJECT TO WHICH ITS SERVICES ARE DIRECTED, AND ITS RESPONSIBILITY IS LIMITED TO WORK SPECIFICALLY PERFORMED FOR THE CLIENT. CONTRACTORS OF THE CLIENT OR THIRD PARTIES TO NOT UNDER THE DIRECT CONTROL OF INTERTECH DESIGN SERVICES, INC.

THIS DOCUMENT, AND THE IDEAS AND DESIGNS INCORPORATED HEREIN, AS AN INSTRUMENT OF PROFESSIONAL SERVICE, IS THE PROPERTY OF INTERTECH DESIGN SERVICES, INC. AND IS NOT TO BE USED, IN WHOLE OR IN PART, FOR ANY OTHER PROJECT, WITHOUT THE WRITTEN AUTHORIZATION OF INTERTECH DESIGN SERVICES, INC. © COPYRIGHT INTERTECH DESIGN SERVICES, INC. ALL RIGHTS RESERVED.

© COPYRIGHT INTERTECH DESIGN SERVICES, INC., 2015

BUFFALO WILD WINGS

CORPORATE - IN-LINE
TOWNE SOUTH PLAZA
3718 US HWY 41
TERRE HAUTE, IN 47802

DRAWING ISSUE

NO	DESCRIPTION	DATE
	70% CLIENT CHECKSET	11/25/15
	BID AND PERMIT	12/22/15

STAMP

12.22.2015

EQUIPMENT PLAN

SCALE: 1/4" = 1'-0"

Drawn By CTW Checked ARG

PROJECT NUMBER
15-0124

SHEET NUMBER
EQ-1

EQUIPMENT SCHEDULE

MARK	QTY	DESCRIPTION	MANUFACTURER	MODEL NUMBER	PROVIDED BY	INSTALLED BY	REMARKS
105'	1	8 1/4" x 103" S.S. RECESSED DRAIN PAN	BWW CUSTOM	BWW SPEC	EQUIP VENDOR	EQUIP VENDOR	
105B	1	STAINLESS STEEL WALL PANEL	ADVANCE/WASSERSTROM	SSWP-200A	EQUIPMENT VENDOR	EQUIPMENT VENDOR	
107AR	3	HAND WASH SINK(SERVER STATION)RIGHT HAND SHIELD	ADVANCE/WASSERSTROM	BWW SPEC	EQUIP VENDOR	G.C. PLUMBER	
	3	FAUCET	T & S BRASS	B-1115-LN	EQUIP VENDOR	G.C. PLUMBER	
	3	SPOUT	T & S BRASS	TSB132X	EQUIP VENDOR	G.C. PLUMBER	
	3	ADAPTOR	T & S BRASS	TSB044A	EQUIP VENDOR	G.C. PLUMBER	
	3	HANDS FREE WAND	COMPONENT HARDWARE	KN91-0100	EQUIP VENDOR	G.C. PLUMBER	
113	1	BAR GLASS RACK (GEN 4.2)	ADVANCE/WASSERSTROM	BWW SPEC	EQUIP VENDOR	EQUIP VENDOR	FREESTANDING UNIT
113A	1	STAINLESS STEEL WALL PANEL – 36" x 36"	ADVANCE/WASSERSTROM	BWW SPEC	EQUIP VENDOR	EQUIP VENDOR	
117FR	1	REACH-IN FREEZER-RIGHT DOOR HINGE	TRAULSEN	G1201-BWW	EQUIP VENDOR	EQUIP VENDOR	EXIST. TO BE RELO.
123	1	EXPO UNIT 96"L-W/LOAD CENTER	ADVANCE/WASSERSTROM	F246610200N-BWW	EXISTING	EQUIP VENDOR	EXIST. TO BE RELO.
123B	1	STAINLESS STEEL EXPO UNIT TRIM – 96"	ADVANCE/WASSERSTROM	F246460300N-BWW	EQUIP VENDOR	EQUIP VENDOR	
125	1	REFRIGERATED PREP TABLE-SOUTHWEST STATION-60"	SILVER KING	SKP2602/C5-BWW	EXISTING	EQUIP VENDOR	EXIST. TO BE RELO.
129	2	MICROWAVE	AMANA	RC22S2-BWW	EXISTING	EQUIP VENDOR	EXIST. TO BE RELO.
131D	2	WARMING DRAWER (DOUBLE)	HATCO	HDW-00138-BWW	EXISTING	EQUIP VENDOR	EXIST. TO BE RELO.
131S	1	WARMING DRAWER (SINGLE)	HATCO	HDWB-00039-BWW	EXISTING	EQUIP VENDOR	EXIST. TO BE RELO.
136	2	TRASH CONTAINER (KITCHEN)	RUBBERMAID	354000 GRAY	SMALLWARES VENDOR	SMALLWARES VENDOR	1 EXIST TO RELO, 1 NEW
139A	1	PREP TABLE-36" L.	ADVANCE/WASSERSTROM	BWW SPEC	EQUIP VENDOR	EQUIP VENDOR	EXIST. TO BE RELO.
141	3	HEAT LAMP-42" L.	HATCO	GRAD-00418-BWW	EXISTING	EQUIP VENDOR	EXIST. TO BE RELO.
145	1	SHAKE TABLE-72" WITH CANTILEVER SHELVES	ADVANCE/WASSERSTROM	BWW SPEC	EXISTING	EQUIP VENDOR	EXIST. TO BE RELO.
153	1	MICROWAVE SHELF-60" L. (W/PAPER BOXES)	ADVANCE/WASSERSTROM	BWW SPEC	EXISTING	EQUIP VENDOR	EXIST. TO BE RELO.
158	1	ICE CUBER	ICE-O-MATIC	ICE 1506HR	EQUIP VENDOR	EQUIP VENDOR	EXIST. TO BE RELO.
176	1	24X60X86 WIRE STORAGE UNIT	METRO	BW2460866C-BWW	EQUIP VENDOR	EQUIP VENDOR	EXIST. TO BE RELO.
187	1	3 COMPARTMENT SINK SMART WALL KIT	METRO	BW36-3COMPSINK	EQUIP VENDOR	EQUIP VENDOR	
188	1	CONVECTION OVEN-HALF SIZE GAS	BLODGETT	DFG-50	EXISTING	EQUIP VENDOR	EXIST. TO BE RELO.
189	1	WORK CENTER 48"	METRO	BWIW-2001	EQUIP VENDOR	EQUIP VENDOR	
195	1	PREP SINK SMART WALL KIT – 48" L.	METRO	BWW1848PREPSINK	EQUIP VENDOR	EQUIP VENDOR	
199	1	DISHMACHINE	HOBART	AM15VL-2(VENTLESS)	EQUIP VENDOR	EQUIP VENDOR	
	1	PRESSURE REGULATOR	HOBART	PRESREG-1/20BR	EQUIP VENDOR	EQUIP VENDOR	
	1	DOOR INTERLOCK	HOBART	AM15-SEF-8080	EQUIP VENDOR	EQUIP VENDOR	
	1	SINGLE POINT ELEC. CONNECTION BOOSTER HTR 3 PH	HOBART	SEF-8100	EQUIP VENDOR	EQUIP VENDOR	
	1	CORNER SPLASH PANEL KIT (OPTIONAL)	HOBART	SPLASH-PNL15	EQUIP VENDOR	EQUIP VENDOR	
199E	1	CLEAN DISH TABLE – 36"L (LH) CUSTOM	ADVANCE/WASSERSTROM	CUSTOM	EQUIP VENDOR	EQUIP VENDOR	
199F	1	SOILED DISH TABLE – 36"L (LH) CUSTOM	ADVANCE/WASSERSTROM	CUSTOM	EQUIP VENDOR	EQUIP VENDOR	
200S	*	CHAIR -WOOD (STADIA)	FURNITURE VENDOR	BWW-200S	OWNER	GC	
202S	*	24 X 36 LOW TABLE (STADIA)	FURNITURE VENDOR	BWW-202S	OWNER	GC	
	*	TABLE BASE	FURNITURE VENDOR	22x22 X BASE	OWNER	GC	
203S	*	36 X 36 LOW TABLE (STADIA)	FURNITURE VENDOR	BWW-203S	OWNER	GC	
	*	TABLE BASE	FURNITURE VENDOR	30x30 X BASE	OWNER	GC	
203SA	*	38 X 38 ADA LOW TABLE (STADIA)	FURNITURE VENDOR	BWW-203SA	OWNER	GC	
	*	(4) LEGS	FURNITURE VENDOR	(4) PIN LEGS	OWNER	GC	
205S	*	36 X 72 LOW TABLE (STADIA)	FURNITURE VENDOR	BWW-205S	OWNER	GC	
	*	(2) TABLE BASES	FURNITURE VENDOR	22x5 (2)	OWNER	GC	
205SA	*	36 X 72 ADA LOW TABLE (STADIA)	FURNITURE VENDOR	BWW-205SA	OWNER	GC	
	*	(2) TABLE BASES	FURNITURE VENDOR	22X5 (2)	OWNER	GC	
205SG	*	36 X 72 ADA LOW TABLE W/BLACK/GRAPHIC(STADIA)	FURNITURE VENDOR	BWW-205SG	OWNER	GC	
	*	(2) TABLE BASES	FURNITURE VENDOR	22x5 (2)	OWNER	GC	
208SE	*	60 LOW BOOTH & TOPPER-Single (STADIA)	FURNITURE VENDOR	BWW-208SE	OWNER	GC	
211SM	*	STANDARD METAL BAR STOOL (STADIA)	FURNITURE VENDOR	BWW-211SM	OWNER	GC	
211SW	*	STANDARD WOOD BAR STOOL (STADIA)	FURNITURE VENDOR	BWW-211SW	OWNER	GC	
214S	*	30 X 30 HIGH TABLE (STADIA)	FURNITURE VENDOR	BWW-214S	OWNER	GC	
	*	TABLE BASE	FURNITURE VENDOR	22x22 X BASE	OWNER	GC	
215S	*	30 X 48 HIGH TABLE (STADIA)	FURNITURE VENDOR	BWW-215S	OWNER	GC	
	*	TABLE BASE	FURNITURE VENDOR	22x5 (2)	OWNER	GC	
218S	3	LOCKER BENCH-60" LONG -INTERIOR(STADIA)	FURNITURE VENDOR	BWW-218S	OWNER	GC	
220	*	BAR FOOTREST-23"-62 PLUS CURVE	FURNITURE VENDOR	BWW-220	OWNER	GC	
222SE	*	60 LOW DOUBLE BOOTH & TOPPER (STADIA)	FURNITURE VENDOR	BWW-222SE	OWNER	GC	
223S	*	30 X 60 LOW TABLE (STADIA)	FURNITURE VENDOR	BWW-223S	OWNER	GC	
	*	TABLE BASE	FURNITURE VENDOR	22x5 (2)	OWNER	GC	
224S	*	30 X 48 LOW TABLE (STADIA)	FURNITURE VENDOR	BWW-224S	OWNER	GC	
	*	TABLE BASE	FURNITURE VENDOR	22x5 (2)	OWNER	GC	
254S	6	MENU HOLDER (STADIA)	MILLWORK VENDOR	BWW SPEC	OWNER	GC	
255	6	SAUCE DISPLAY SHELF	MILLWORK VENDOR	BWW SPEC	OWNER	GC	
260	2	BAR STEP	MILLWORK VENDOR	BWW SPEC	OWNER	GC	
261	1	BACK BAR COUNTER	MILLWORK VENDOR	BWW SPEC	OWNER	GC	
262	1	GLASS RACK DRAIN PAN	MILLWORK VENDOR	BWW SPEC	OWNER	GC	
262A	1	GLASS RACK DRAIN PAN DIVIDER	MILLWORK VENDOR	BWW SPEC	OWNER	GC	
263	1	FRONT BAR COUNTER (GEN 4.2)	MILLWORK VENDOR	BWW SPEC	OWNER	GC	
264S	4	SERVER STATION BASE CABINET W/DOORS (STADIA)	MILLWORK VENDOR	BWW SPEC	OWNER	GC	
264SB	3	SERVER STAT. UPPER CABINET W/DOORS-26"(STADIA)	MILLWORK VENDOR	BWW SPEC	OWNER	GC	
266S	2	RESTROOM VANITY C-TOP & CABINET(STADIA)	MILLWORK VENDOR	BWW SPEC	OWNER	GC	
268	1	HOSTESS STATION (GEN 4.2)	MILLWORK VENDOR	BWW SPEC	OWNER	GC	
270S	1	FULL LGTH SERV. STAT. CORIAN TOP	MILLWORK VENDOR	BWW SPEC	OWNER	GC	
272	2	BUZZTIME CHARGING BOX (SINGLE)	MILLWORK VENDOR	EXIST	OWNER	GC	EXIST. TO BE RELO.
272A	1	BUZZTIME CHARGING BOX (ADA)	MILLWORK VENDOR	EXIST	OWNER	GC	EXIST. TO BE RELO.
301	6	RECEIPT PRINTER	N/A	N/A	EXISTING	OWNER	EXIST. TO BE RELO.
302	6	COMPUTER HUB	N/A	N/A	EXISTING	OWNER	EXIST. TO BE RELO.
303	6	CREDIT CARD MACHINE	N/A	N/A	EXISTING	OWNER	EXIST. TO BE RELO.
304	6	P.O.S. COMPUTER	N/A	N/A	EXISTING	OWNER	EXIST. TO BE RELO.
306	1	PAGER TRANSMITTER/CHARING BASE	NTN	GUEST CALL	EXISTING	OWNER	EXIST. TO BE RELO.
307	2	CASH DRAWER	N/A	N/A	EXISTING	OWNER	EXIST. TO BE RELO.
320	1	VIDEO GAME			EXISTING	BWW VENDOR	EXIST. TO BE RELO.
321	1	JUKE BOX	TOUCHTUNES	OVATION	BWW VENDOR	BWW VENDOR	
334	1	COFEE/TEA BREWER	ROYAL CUP	EXIST	BWW VENDOR	BWW VENDOR	EXIST. TO BE RELO.
336	2	TEA DISPENSER	ROYAL CUP	TDO-N-3.5	BWW VENDOR	BWW VENDOR	EXIST. TO BE RELO.
350A	1	AUDIO / VIDEO EQUIPMENT RACK	BWW CUSTOM	N/A	BWW VENDOR	BWW VENDOR	EXIST. TO BE RELO.
378	1	SODA DISPENSER-DROP-IN	PEPSICO		PEPSICO	PEPSICO	EXIST. TO BE RELO.
379	1	BAR GUN	PEPSICO		PEPSICO	PEPSICO	
380C	1	WATER FILTER SYSTEM-DISHMACHINE	SELECTO	IC620+	BWW VENDOR	G.C. PLUMBER	

A/V EQUIPMENT SCHEDULE

MARK	QTY	DESCRIPTION	MANUFACTURER	MODEL NUMBER	PROVIDED BY	INSTALLED BY	REMARKS
351A	2	RELOCATED PROJECTOR			--	BWW VENDOR	EXIST TO BE RELO
354A	2	RELOCATED PROJECTION SCREEN (16:9 IMAGE RATIO)	DALITE	92 DIAG-DIM 48x84	--	BWW VENDOR	EXIST TO BE RELO
362A	5	RELOCATED FLAT SCREEN TV-42"			BWW VENDOR	BWW VENDOR	EXIST. TO BE RELO.
363	27	FLAT SCREEN TV-55"			BWW VENDOR	BWW VENDOR	
363A	4	RELOCATED FLAT SCREEN TV-55"			BWW VENDOR	BWW VENDOR	EXIST TO BE RELO
365	8	FLAT SCREEN TV-75"			BWW VENDOR	BWW VENDOR	
366A	1	RELOCATED FLAT SCREEN TV-80"					EXIST TO BE RELO

FINISH SCHEDULE

MARK	DESCRIPTION	MANUFACTURER	I.D. / SERIES	COLOR	REMARKS
FLOORING					
CPT1	CARPET	MOHAWK	BROADLOOM-CUSTOM BWW 50545	37907/ PATTERN# 04353	USE 'SEAM SEALER' AT ALL SEAMS & ANTI-FRAY
GT1	DINING AREA CERAMIC TILE	RBC	EVOLUTION- BW11	-	6"x36"- GT1
QT1	QUARRY TILE	CASALGRANDE PADANA	GRANITO	MORACCO	REFERENCE ONLY, G.C. TO VERIFY IN FIELD TO MATCH EXISTING, 8"X8" PROFILE
QT3	QUARRY TILE	RBC TILE & STONE	Q144A ABRASIVE	GRAY	6"x6", QT-6
RSF	RESILIENT SHEET FLOORING	PROTECT-ALL	--	LIGHT GRAY	MATTE FINISH, 1/4" THICKNESS WITH 6" COVED
BASE					
CT5	DINING AREA CERAMIC BASE	RBC	BW3200- COVE12	SUPER BLACK	6"x12"- GT1
CT5A	DINING AREA CERAMIC BASE-OUT CORNER	RBC	BW3200- COVE120C	SUPER BLACK	CORNER- GT1
QT2	QUARRY TILE BASE	CASALGRANDE PADANA	GRANITO	MORACCO	REFERENCE ONLY, G.C. TO VERIFY IN FIELD TO MATCH EXISTING.
QT2A	QUARRY BASE, RIGHT CORNER	CASALGRANDE PADANA	GRANITO	MORACCO	6" COVED
QT2B	QUARRY BASE LEFT CORNER	CASALGRANDE PADANA	GRANITO	MORACCO	
QT4	QUARRY TILE COVE BASE	RBC TILE & STONE	44-Q3565 COVE	GRAY	6"X6"- USE WITH GT6
QT4A	QUARRY BASE, RIGHT CORNER	RBC TILE & STONE	44-QCR3565 - COVED	GRAY	6"X6" - USE WITH GT6
QT4B	QUARRY BASE LEFT CORNER	RBC TILE & STONE	44-QCL3565 - COVED	GRAY	6"X6" - USE WITH GT6
RB	RESILIENT BASE	ARMSTRONG		BLACK	6"
SST8	STAINLESS STEEL BASE	DSI	STAINLESS STEEL OUTSIDE COVE	BRUSHED	6" HIGH
B6	PROTECT-ALL COVE BASE	OSCODA PLASTICS	--	LIGHT GRAY	6" HIGH
GROUT					
GT1	SANDED GROUT	BOSTIK- HYDROMENT	H151-25- SANDED	TAUPE	--
GT2	SANDED GROUT	BOSTIK- HYDROMENT	H1605-25	DELOREAN GRAY	FOR BW1060 AREAS
GT3	GROUT	BOSTIK- HYDROMENT	H188U	BUFF – SANDED	FOR BW640 WALL TILE AREAS
GT4	GROUT	BOSTIK- HYDROMENT	H1815-25	CHAR BLACK - SANDED	FOR BW662 WALL TILE AREAS
GT6	EPOXY GROUT	BOSTIK- HYDROMENT	H160- EPOXY	DELORIAN GRAY	ALL QUARRY TILE
WALLS					
FCP2	FIBER CEMENT PANELS	NICHIHA USA	VINTAGE BRICK	WHITEWASH	--
FRP1	FIBERGLASS REINFORCED PLASTIC	KEMLITE	PEBBLE TEXTURE	WHITE- GLOSS	--
FRP2	FIBERGLASS REINFORCED PLASTIC	KEMLITE	PEBBLE TEXTURE	BLACK- GLOSS	--
WC1	WALL COVERING	FORBO MARMOLEUM	REAL #2939	BLACK	--
C1	PAINT	SHERWIN WILLIAMS	SW #6906	CITRUS	EGGSHELL
C2	PAINT	SHERWIN WILLIAMS	SW #7044	AMAZING GRAY	EGGSHELL
C3	PAINT	SHERWIN WILLIAMS	SW #7069	IRON ORE	EGGSHELL
C4	PAINT	SHERWIN WILLIAMS	SW #6991	BLACK MAGIC*	EGGSHELL
C5	PAINT	SHERWIN WILLIAMS	SW #7006	EXTRA WHITE	EGGSHELL
C6	PAINT	SHERWIN WILLIAMS	SW #7019	GAUTLET GRAY	EGGSHELL
C8	PAINT	SHERWIN WILLIAMS	SW #7018	DOVETAIL	EGGSHELL
C9	PAINT	SHERWIN WILLIAMS	SW #7055	ENDURING BRONZE	EXTERIOR GRADE
WCG1	STAINLESS STEEL CORNER GUARD	-	16GA.- 304 SS	BRUSHED FINISH	1-1/2"x1-1/2"
WCG2	PVC CORNER GUARD	-	BY MILLWORK VENDOR	BLACK	1-1/2"x1-1/2"
WCG3	STAINLESS STEEL END CAP	-	18 GA. 304SS	BRUSHED FINISH	2" X WALL THICKNESS X 2"
MISC.					
PLAM1	PLASTIC LAMINATE	WILSONART	1573-60	FROSTY WHITE	MATTE FINISH
PLAM2	PLASTIC LAMINATE	WILSONART	1595-60	BLACK	MATTE FINISH
PLAM5	PLASTIC LAMINATE	ADVANCED TECHNOLOGY	NUMETAL	#256 GEK	DIAMOND PLATE STAINLESS STEEL
SS1	SOLID SURFACE	CORIAN	-	CONCRETE	-
WD1	MAPLE	PLAIN SAWN	-	PREFINISHED	BY MILLWORK VENDOR, REFER TO DRAWINGS FOR LOCATIONS.
T1	TILE TRIM- RESTROOM TILE	SCHLUTER SYSTEMS	RO 80 EB	BRUSHED STAINLESS	-
T2	FLOOR TRANSITION- TILE TO CARPET	SCHLUTER SYSTEMS	RENO- TK AE	SATIN ANODIZED ALUMINUM	-
T3	FLOOR TRANSITION- TILE TO TILE	SCHLUTER SYSTEMS	DECO AE	SATIN ANODIZED ALUMINUM	-
T4	FLOOR TRANSITION- TILE TO CONCRETE	SCHLUTER SYSTEMS	RENO- RAMP AE	SATIN ANODIZED ALUMINUM	-
T5	FLOOR TRANSITION- TILE TO RESINOUS FLR	SCHLUTER SYSTEMS	DECO AE	SATIN ANODIZED ALUMINUM	OPTIONAL
STS	STAINLESS STEEL	--	--	--	PANELS AS SPECIFIED PER PLAN
ACT1	2X4 VINYL FACED CYP. PANELS	USG INTERIORS	#3270 STIPPLE	WHITE	GRID TO MATCH TILE. CAULK(WHITE) GRID @ WALL.

* SATIN FINISH DOORS AND FRAMES

** SST BASE ON CORPORATE STORES TYPICAL AT WET AREA OUTSIDE CORNERS

GENERAL NOTE

- IT IS THE OWNER'S RESPONSIBILITY TO VERIFY AND CONFIRM ANY AND ALL EQUIPMENT IS TO BUFFALO WILD WINGS SPECIFICATIONS AND STANDARDS, AND TO VERIFY AND CONFIRM ALL EQUIPMENT AND QUANTITIES WITH ALL BWW/OWNER VENDOR'S AND CONTRACTORS. ANY OWNER, VENDOR, OR CONTRACTOR REQUESTED DEVIATION FROM BUFFALO WILD WINGS SPECIFICATIONS AND/OR STANDARDS MUST FIRST BE APPROVED IN WRITING BY BUFFALO WILD WINGS CORPORATE.
- IT IS THE FURNITURE VENDOR'S RESPONSIBILITY TO VERIFY THE FINAL QUANTITIES OF THE ITEMS LISTED AS QUANTITY '*'.

Intertech Design Services, Inc.
Architecture and Engineering
9675 Montgomery Rd.
Cincinnati, Ohio 45242
Phone: (513) 791-8888
Fax: (513) 792-7923
Web: www.intertechdesign.net

INTERTECH DESIGN SERVICES, INC. HAS EXERCISED REASONABLE SKILL AND JUDGMENT IN PROVIDING PROFESSIONAL SERVICES. INTERTECH DESIGN SERVICES, INC. IS NOT A GUARANTOR OF THE PROJECT TO WHICH ITS SERVICES ARE DIRECTED, AND ITS RESPONSIBILITY IS LIMITED TO WORK SPECIFICALLY PERFORMED FOR THE CLIENT, CONSTRUCTION OF THE CLIENT'S WORK THAT IS NOT UNDER THE DIRECT CONTROL OF INTERTECH DESIGN SERVICES, INC.

THIS DOCUMENT, AND THE IDEAS AND DESIGNS INCORPORATED HEREIN, AS AN INSTRUMENT OF PROFESSIONAL SERVICE, IS THE PROPERTY OF INTERTECH DESIGN SERVICES, INC. AND IS NOT TO BE USED, IN WHOLE OR IN PART, FOR ANY OTHER PROJECT, WITHOUT THE WRITTEN AUTHORIZATION OF INTERTECH DESIGN SERVICES, INC. © COPYRIGHT INTERTECH DESIGN SERVICES, INC. ALL RIGHTS RESERVED.

© COPYRIGHT INTERTECH DESIGN SERVICES, INC., 2015

BUFFALO WILD WINGS

CORPORATE - IN-LINE
TOWNE SOUTH PLAZA
3718 US HWY 41
TERRE HAUTE, IN 47802

DRAWING ISSUE

NO	DESCRIPTION	DATE
	70% CLIENT CHECKSET	11/25/15
	BID AND PERMIT	12/22/15

STAMP

12.22.2015

EQUIPMENT AND FINISH SCHEDULE

SCALE: NONE

Drawn By CTW Checked ARG

PROJECT NUMBER
15-0124

SHEET NUMBER
EQ-2

ORIGINAL PRINT SIZE - 30 X 42

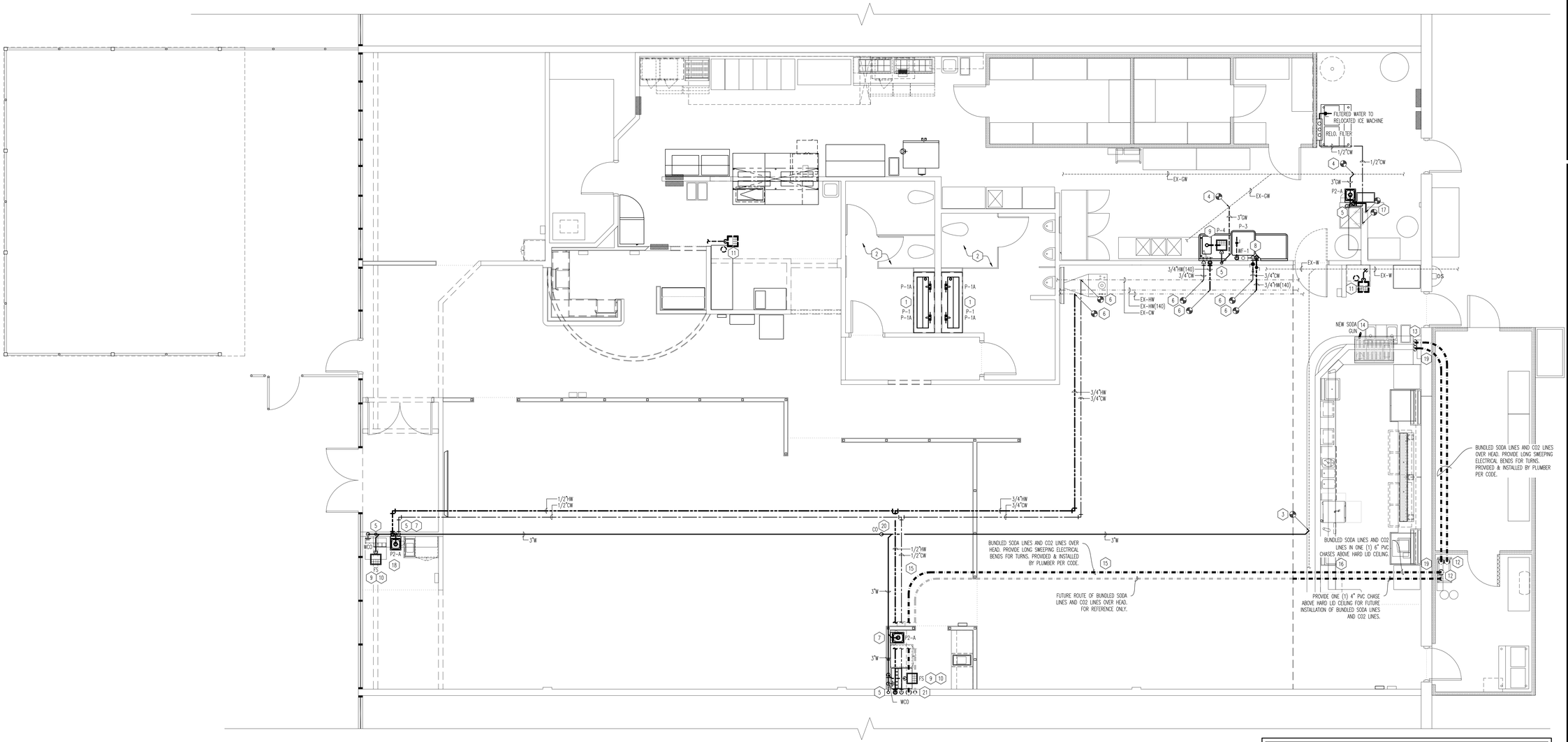

01 MECHANICAL AND PLUMBING PLAN

SCALE: 1/4"=1'-0"

LEGEND

- SANITARY PIPING (SCHEDULE 80 PVC)
- GREASE WASTE PIPING
- VENT PIPING
- SODA LINES
- BEER LINES
- GREASE RECOVERY LINE
- INDIRECT WASTE LINE
- COLD WATER PIPING
- HOT WATER PIPING (115')
- HOT WATER PIPING (140')
- EXISTING HOT WATER PIPING
- EXISTING COLD WATER PIPING
- EXISTING SANITARY/GREASE WASTE PIPING
- EXISTING FLOOR RECEPTORS
- DEMO FLOOR RECEPTORS
- NEW FLOOR RECEPTORS
- BACKFLOW PREVENTER (TO CONFORM TO ASSE 1022)

PIPING MATERIALS

SEWER BELOW GRADE	SCHEDULE 40 PVC
WASTE VENT ABOVE GRADE	SCHEDULE 40 PVC
COLD & HOT WATER (ABOVE GROUND)	TYPE 'L' COPPER OR PEX
COLD WATER (BURIED)	TYPE 'K' COPPER OR PEX
GAS (ON ROOF)	SCHEDULE 40 BLACK STEEL
GAS (INSIDE BUILDING)	SCHEDULE 40 BLACK STEEL
CONDENSATE DRAIN	TYPE 'M' COPPER
INDIRECT DRAIN (INSIDE BUILDING)	DWV COPPER

NOTE: REFER TO PROJECT SPECIFICATION MANUAL.

FIXTURE AND SPECIALTIES PLUMBING SCHEDULE

MARK	DESCRIPTION	SUPPLIED BY	INSTALLED BY	MANUFACTURER	MODEL #	COLOR	WASTE	VENT	H.W.	C.W.	REMARKS
P-1	COUNTERTOP SINK	MILLWORK VENDOR	G.C.	CORIAN	CUSTOM TROUGH	REFER TO FINISH PLAN	1-1/2"	1-1/2"	1/2"	1/2"	--
	GRID STRAINER	G.C. PLUMBER	G.C. PLUMBER	SLOAN OPTIMA	ETF-460-A	CHROME PLATED	--	--	--	--	W/ 1-1/4" OUTLET TUBE
P-1A	FAUCET	G.C. PLUMBER	G.C. PLUMBER	TOTO	TEL145-D10EJ#CP	CHROME PLATED	--	--	--	--	4" CENTER 1.0 GPM
P-2A	HAND WASH SINK, NARROW	EQUIPMENT VENDOR	G.C. PLUMBER	--	--	--	1-1/2"	--	1/2"	1/2"	TO HAVE HANDS FREE WAND & CHECK VALVES ON WATER SUPPLY, COORDINATE SIDE SPLASH GUARD W/ARCH. PLANS
	TRAP WRAP	G.C. PLUMBER	G.C. PLUMBER	--	--	--	--	--	--	--	INSTALL ON EXPOSED DRAIN PIPES
P-3	DISH MACHINE (VENTLESS)	EQUIPMENT VENDOR	EQUIPMENT VENDOR	--	--	--	2" INDIR.	--	1/2" (140')	1/2"	--
P-4	SOILED DISHTABLE	EQUIPMENT VENDOR	EQUIPMENT VENDOR*	--	--	--	2" INDIR.	--	3/4" (140')	3/4"	--
FS	FLOOR SINK	G.C. PLUMBER	G.C. PLUMBER	ZURN	Z1900	CAST IRON	3"	1-1/2"	--	--	W/ ACID RESISTANT INTERIOR AND COATING
WF-1	WATER FILTER SYSTEM	BWW VENDOR	G.C. PLUMBER	SELECTO	IQ620+	--	--	--	--	1/2"	--

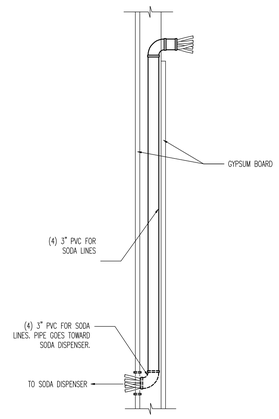

02 CHASE IN WALL FOR SODA LINES

SCALE: NONE

GENERAL NOTES

1. G.C. TO REPLACE ALL HVAC FILTERS POST REMODEL.
2. CONTRACTOR TO FIELD VERIFY ALL CONDITIONS BEFORE START OF WORK. VERIFY MECHANICAL SYSTEMS THAT WILL BE MODIFIED CONTACT ARCHITECT / ENGINEER WITH ANY CONFLICTS.
3. G.C. TO VERIFY ALL DRAINS AND WATER LINES RELATED TO THE WORK IN THESE DOCUMENTS PRIOR TO BID SUBMITTAL.
4. REFER TO SHEET D100 FOR EXISTING LOCATION OF EQUIPMENT.
5. DO NOT RUN ANY PLUMBING EXPOSED IN THE DINING AREA.
6. ALL EXPOSED WATER PIPING TO BE INSULATED.
7. BUNDLED SODA LINES TO BE RUN OVERHEAD. PROVIDE (2) 6" PVC CHASES WHEN SODA LINES ARE RUN ABOVE INACCESSIBLE CEILINGS.
8. TRAPS AND EXPOSED PIPING SHALL BE NICKEL PLATED.
9. AREAS OF SAW CUTTING OF THE EXISTING SLAB TO BE REVIEWED BY THE G.C. PRIOR TO SHUT DOWN, COORDINATED WITH THE BWW CM, AND X-RAYED.

KEY NOTES

1. EXISTING LAVATORY SINKS AND FAUCETS TO BE REMOVED. RECONNECT NEW FIXTURES TO EXISTING PLUMBING LINES. SEE PLUMBING SCHEDULE ON THIS SHEET FOR MORE INFO.
2. RESEAL ALL RESTROOM FIXTURES. WORK SHALL INCLUDE BUT IS NOT LIMITED TO REPLACING WAX RINGS, RECAULKING FIXTURES TO FLOOR OR WALL, ENSURING NO VALVES ARE LEAKING, ETC.
3. CONNECT NEW SANITARY LINE TO EXISTING SANITARY LINE IN SPACE. FIELD VERIFY LOCATION, DEPTH, SIZE, SLOPE, AND DIRECTION OF FLOW. CONTACT ARCHITECT/ENGINEER WITH ANY CONFLICTS.
4. CONNECT NEW GREASE WASTE LINE TO EXISTING GREASE WASTE LINE IN SPACE. FIELD VERIFY LOCATION, DEPTH, SIZE, SLOPE, AND DIRECTION OF FLOW. CONTACT ARCHITECT/ENGINEER WITH ANY CONFLICTS.
5. ROUTE AND CONNECT NEW VENT RISER TO NEAREST VENT BRANCH SYSTEM IN BUILDING. FIELD VERIFY LOCATION. CONTACT ARCHITECT/ENGINEER WITH ANY CONFLICTS.
6. CONNECT NEW WATER PIPING TO EXISTING WATER LINES AS SHOWN. FIELD VERIFY EXISTING WATER LINE SIZES. UPSIZE BACK TO WATER HEATER AS NECESSARY. WATER LINE MUST MEET 2" 55 PSIG RESIDUAL. VERIFY IN FIELD.
7. G.C. TO PROVIDE 1/2" HOT AND COLD WATER WITH SHUTOFF VALVE TO SINK.
8. PLUMBER TO CONNECT WATER FILTER AND PROVIDE AND INSTALL WATER HAMMER ARRESTORS AT NEW DISHMACHINE. ROUTE DRAIN FROM DISHMACHINE TO EXISTING FLOOR SINK BELOW.
9. INDIRECT WASTE BY PLUMBING CONTRACTOR. ROUTE INDIRECT WASTE LINE TO FLOOR RECEPTOR BELOW. FIELD VERIFY LOCATION. SEE PLUMBING FIXTURE SCHEDULE THIS SHEET FOR MORE INFORMATION.
10. FLOOR SINK AT SODA STATION TO BE SET FLUSH WITH FLOOR AND PROJECT HALF EXPOSED UNDER MACHINE. PLUMBER TO PROVIDE AND INSTALL PVC INDIRECT WASTE PIPING FOR BEVERAGE STATION, TERMINATE AT FLOOR SINK WITH AIR-GAP.
11. EXISTING PLUMBING FIXTURE AND SODA CHASE TO BE CAPPED BELOW SLAB AND REMOVED SO AS TO PREVENT DEAD LEG. SEAL AND ABANDON SODA CHASE IN PLACE.
12. CONNECT NEW SODA LINE TO EXISTING BAG-N-BOX. FIELD VERIFY LOCATION. COORDINATE WITH BEVERAGE VENDOR.
13. SODA LINES TO DROP IN WALL THROUGH FOUR (4) 3" PVC CHASES IN WALL. G.C. SHALL ENSURE PROPER FIRE STOPPING IS PROVIDED WHERE REQUIRED. BEVERAGE VENDOR TO SPLIT SODA BUNDLES ACCORDINGLY. RUN CHASES DOWN IN WALL TO SODA MACHINE DROP-IN OR SODA GUN. LOCATE INSIDE STAND. COORDINATE WITH EQUIPMENT VENDOR AND BEVERAGE REP. SEE DETAIL CHASE IN WALL FOR SODA LINES THIS SHEET.
14. ROUTE SODA LINES FROM DROP IN FULL HEIGHT WALL THROUGH BAR WALL TO SODA GUN. FIELD VERIFY. CONTACT ARCHITECT/ENGINEER WITH ANY ISSUES.
15. BEVERAGE VENDOR TO INSTALL WRAPPED LINES, TIGHT TO DECK WHERE EXPOSED, G.C. TO PAINT C2 IN EXPOSED CEILING AREAS.
16. RUN EACH SODA BUNDLE THROUGH 6" PVC CHASE ABOVE HARD LID CEILING.
17. CONNECT WATER LINES FOR NEW HAND SINK TO WATER LINES AT MOP SINK. FIELD VERIFY EXISTING WATER LINE SIZES. UPSIZE BACK TO WATER HEATER AS NECESSARY. WATER LINE MUST MEET 2" 55 PSIG RESIDUAL. IF WATER LINE IS HW(140) PROVIDE MIXING VALVE SET TO 110°.
18. REMOVE SUMP PUMP AT THIS LOCATION. AND ALL ASSOCIATED COMPONENTS. G.C. IS RESPONSIBLE FOR SLAB PATCH/REPAIR.
19. PROPERLY INSULATE AND SEAL LINES PASSING THROUGH EXTERIOR WALLS SO AS TO PREVENT FREEZING.
20. CLEANOUT TO HAVE RECESSED TOP. MATCH FLOOR FINISH.
21. SODA LINES TO DROP IN WALL THROUGH ONE (1) 6" PVC CHASE IN WALL. PROVIDE AND INSTALL ONE (1) ADDITIONAL 4" PVC CHASE IN WALL FOR FUTURE SODA BUNDLE. G.C. SHALL ENSURE PROPER FIRE STOPPING IS PROVIDED WHERE REQUIRED. RUN CHASES DOWN IN WALL TO SODA MACHINE DROP-IN OR SODA GUN. LOCATE INSIDE STAND. COORDINATE WITH EQUIPMENT VENDOR AND BEVERAGE REP. SEE SODA CHASE DETAIL 32 ON SHEET A401.

Intertech Design Services, Inc.
Architecture and Engineering
9435 Montgomery Rd.
Cincinnati, Ohio 45242
Phone: (513) 791-8888
Fax: (513) 792-7923
Web: www.intertechdesigninc.net

INTERTECH DESIGN SERVICES, INC. HAS EXERCISED REASONABLE SKILL AND JUDGMENT IN PROVIDING PROFESSIONAL SERVICES. INTERTECH DESIGN SERVICES, INC. IS NOT A GUARANTOR OF THE PROJECT TO WHICH ITS SERVICES ARE DIRECTED, AND ITS RESPONSIBILITY IS LIMITED TO WORK SPECIFICALLY PERFORMED FOR THE CLIENT. OMISSIONS OF THE CLIENT OR THIRD PARTIES NOT UNDER THE DIRECT CONTROL OF INTERTECH DESIGN SERVICES, INC.

THIS DOCUMENT, AND THE IDEAS AND DESIGNS INCORPORATED HEREIN, AS AN INSTRUMENT OF PROFESSIONAL SERVICE, IS THE PROPERTY OF INTERTECH DESIGN SERVICES, INC. AND IS NOT TO BE USED, IN WHOLE OR IN PART, FOR ANY OTHER PROJECT, WITHOUT THE WRITTEN AUTHORIZATION OF INTERTECH DESIGN SERVICES, INC. © COPYRIGHT INTERTECH DESIGN SERVICES, INC., ALL RIGHTS RESERVED.

© COPYRIGHT INTERTECH DESIGN SERVICES, INC. 2015

BUFFALO WILD WINGS

CORPORATE - IN-LINE
TOWNE SOUTH PLAZA
3718 US HWY 41
TERRE HAUTE, IN 47802

DRAWING ISSUE

NO	DESCRIPTION	DATE
	70% CLIENT CHECKSET	11/25/15
	BID AND PERMIT	12/22/15

STAMP

12.22.2015

MECHANICAL AND PLUMBING SHEET

SCALE: AS NOTED

Drawn By: NDM Checked: SJW

PROJECT NUMBER
15-0124

SHEET NUMBER
MP100

ORIGINAL PRINT SIZE - 30 X 42

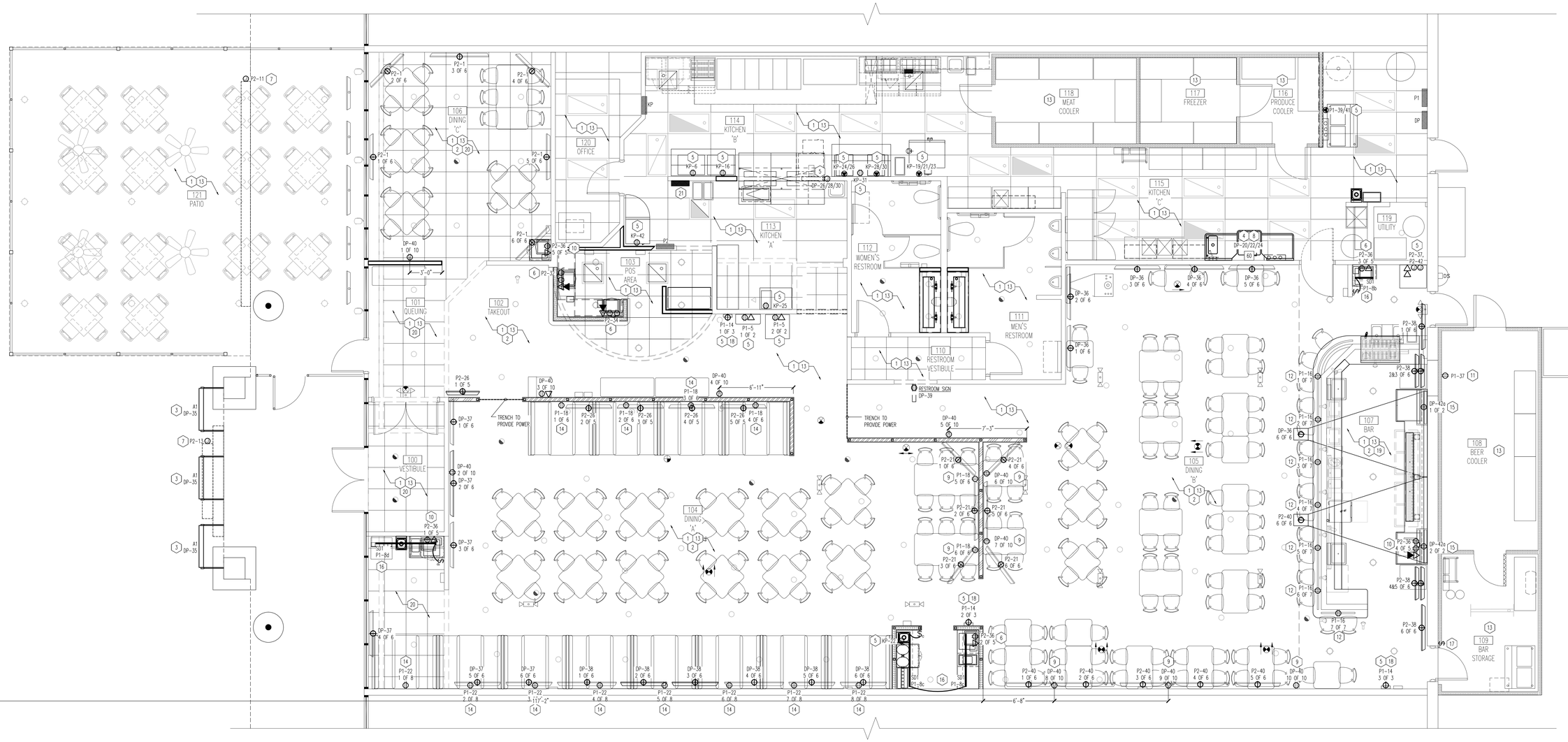

01 POWER AND LIGHTING PLAN

SCALE: 1/4"=1'-0"

GENERAL NOTES

1. THE EXISTING PANEL SCHEDULE INFORMATION HAS BEEN SUPPLIED AND SHOULD BE CURRENT. IF ANY CHANGES OCCUR, MARK-UP AND RETURN FOR AS BUILT UPDATES.
2. EXISTING EMERGENCY LIGHTING AND AREA LIGHTING TO REMAIN UNLESS OTHERWISE NOTED. CONTRACTOR RESPONSIBLE FOR VERIFYING FUNCTIONALITY OF EXISTING FIXTURES PRIOR TO SHUTDOWN REPLACE OR RELAMP AS REQUIRED. COORDINATE WITH OWNER. ALL WORK IS REIMBURSIBLE.
3. ADJUST RECEPTACLES WHEN CHANGES AND MODIFICATIONS OCCUR TO WALLS. RELOCATE TO THE NEAREST POSSIBLE LOCATION.
4. NO SURFACE MOUNTED CONDUITS ON WALLS PERMITTED. IF EXISTING, CONTRACTOR TO RUN THROUGH WALLS. PAINT CONDUIT C2 AMAZING GRAY IN OPEN CEILING.
5. ELECTRICAL CONTRACTOR TO ENSURE ANY CHANGES TO PANELS ARE NOTED AND BREAKERS ARE MARKED.
6. ALL EXPOSED ITEMS RAN THROUGH EXPOSED CEILING ARE TO BE NEATLY RAN, TIGHT TO DECK/JOISTS AND PAINTED C2 AMAZING GRAY. WHERE IN EXPOSED STRUCTURE AREAS.
7. COORDINATE WITH VENDOR FOR ALL A/V UPGRADES AND DISTRIBUTION OF UNITS FOR INSTALLATION.
8. ELECTRICAL CONTRACTOR SHALL FIELD VERIFY ALL EXISTING CONDITIONS INCLUDING EXACT EQUIPMENT LOCATIONS.
9. ANY EXISTING OUTLETS TO REMAIN UNLESS OTHERWISE NOTED. ALL EXISTING OUTLETS AND OUTLET COVERS ARE TO BE UPGRADED TO BLACK.
10. ELECTRICAL CONTRACTOR SHALL PROVIDE CONDUITS IN WALL AND CABLING COMPANY TO RUN CABLES AS NEEDED. GENERAL CONTRACTOR TO RUN CAT5 AND TERMINATE FOR TV'S.
11. ELECTRICAL CONTRACTOR SHALL PROVIDE IN BID FOR AN ADDITIONAL 5 DUPLEX OUTLETS TO BE ADDED IN THROUGHOUT SPACE, AS DIRECTED BY OWNER. FIELD VERIFY LOCATIONS.
12. EXISTING SECURITY SYSTEM IN PLACE TO REMAIN AND SHALL BE EXPANDED AS NECESSARY TO ACCOMMODATE ADDITION.
13. ALL 120V, 20 AMP BRANCH CIRCUITING SHALL BE IN 3/4" CONDUIT, 2#12 AND 1#12 GROUND UNLESS NOTED OTHERWISE. USE #10 WIRE FOR BRANCH CIRCUIT RUNS LONGER THAN 100 FT.
14. ALL P.O.S. STATIONS REQUIRE AN ISOLATED GROUND FOR PROPER CONNECTION. POS SYSTEM SHALL BE AN ISOLATED GROUND SYSTEM PER NEC 250.96B. ALL BRANCH CIRCUITS FED TO POS EQUIPMENT SHALL HAVE SEPARATE NEUTRAL AND GROUNDING CONDUCTORS.
15. ALL ISOLATED GROUND OUTLETS TO BE FITTED WITH ORANGE RECEPTACLES.
16. "OPEN CEILING" AREA: ROOF JOIST, DECK, LIGHT FIXTURE STEMS, CONDUIT, ETC. PAINTED "C2" AMAZING GRAY–DUCTWORK, STRUCTURAL BEAMS, HVAC, AND A/V POLES PAINTED "C3" IRON ORE.
17. ALL TELEVISION/PROJECTOR POWER CIRCUIT EXTENSIONS SHALL UTILIZE #12 CONDUCTORS WITH DEDICATED NEUTRALS AND #12 GROUND. PROVIDE ALL REQUIRED BLANK COVERS. CONFIRM AND COORDINATE TELEVISION CIRCUITS TO HAVE A MAXIMUM OF SIX TELEVISIONS ON ANY CIRCUIT.
18. ELECTRICAL CONTRACTOR TO FISH ALL CONVENIENCE OUTLETS IN WALL – DO NOT DAISY CHAIN – TO SALVAGE THE EXISTING MARMOLEUM WALL FINISH ANYWHERE POSSIBLE.
19. UNLESS OTHERWISE NOTED, A/V TO REMAIN IN EXISTING LOCATION FOR NEW LAYOUT.
20. NO ELECTRICAL WORK PROPOSED FOR PATIO.

KEY NOTES

1. ELECTRICAL CONTRACTOR SHALL FIELD VERIFY EXISTING EGRESS AND EMERGENCY LIGHTING AND FIRE PROTECTION DEVICES ARE IN GOOD WORKING CONDITION, REPLACE AS NECESSARY.
2. ALL TELEVISION/PROJECTOR UNITS ARE NEW OR RELOCATED. REFER TO EQ–1 & EQ–2 FOR DESIGNATION OF NEW VS RELOCATED. CIRCUIT TO REMAIN. PROVIDE NEW CIRCUIT AND DATA TO TELEVISION IF DOES NOT ALREADY EXIST IN LOCATION. VERIFY EXACT CONDITIONS IN FIELD AND COORDINATE WITH A/V VENDOR FOR RELOCATION PRIOR TO SHUTDOWN.
3. ELECTRICAL CONTRACTOR SHALL ROUTE NEW EXTERIOR LIGHT FIXTURES THROUGH EXISTING PHOTOCELL AND TIMER. ELECTRICAL CONTRACTOR SHALL PROVIDE AND INSTALL PHOTOCELL AND TIMER IF THEY ARE NOT EXISTING. REFER TO EXTERIOR ELEVATIONS FOR LOCATION AND MOUNTING HEIGHTS OF EXTERIOR LIGHTS.
4. EQUIPMENT IS NEW, ELECTRICAL CONTRACTOR SHALL PROVIDE ALL POWER/DATA/WIRING/CONDUIT TO NEW LOCATION. IF POWER IS ALREADY EXISTING IN LOCATION, REUSE EXISTING CIRCUIT AS NECESSARY. FIELD VERIFY EXISTING CONDITIONS.
5. EQUIPMENT IS RELOCATED, ELECTRICAL CONTRACTOR SHALL RELOCATE ALL POWER/DATA/WIRING/CONDUIT TO NEW LOCATION. FIELD VERIFY EXISTING CONDITIONS. SEE SHEET D100 FOR EXISTING LOCATION OF RELOCATED EQUIPMENT.
6. P.O.S. STATION IS RELOCATED. CONTRACTOR TO RELOCATE CIRCUIT, DATA, AND CABLING AT ALL RELOCATED LOCATIONS. ALL POS DATA CATS SHALL TERMINATE BACK AT MANAGER'S OFFICE ABOVE DOOR. COORDINATE EXACT LOCATION WITH OWNER. VERIFY DINING POS RECEPTACLES AND DATA ARE MOUNTED AT 36" A.F.F. PROVIDE DISCONNECT AS NEEDED.
7. EXTERIOR SIGN IS REPLACED IN SAME LOCATION. ELECTRICAL CONTRACTOR SHALL EXTEND CONDUIT AND WIRE AND MAKE FINAL CONNECTIONS. VERIFY CIRCUIT SHALL BE CONTROLLED BY TIME CLOCK/PHOTOCELL. FIELD VERIFY EXISTING CONDITIONS. REFER TO A100 FOR LOCATIONS AND ELEVATIONS.
8. PROVIDE NEMA 3R STAINLESS STEEL DISCONNECT FOR NEW DISHWASHER. FIELD VERIFY EXISTING CONDITIONS PRIOR TO ROUGH–IN.
9. PROVIDE COMBINATION USB/POWER OUTLETS (PASS & SEYMOUR #TR5362USBBK OR APPROVED EQUAL) FOR GENERAL USE. VERIFY EXACT CONDITIONS IN FIELD. COORDINATE WITH OWNER FOR LOCATIONS. LOCATE RECEPTACLES AT 34" A.F.F. AT LOW TABLES AND 46" A.F.F. AT HIGH TABLES. CENTER ON TABLE. IF NOT LOCATED AT TABLES, LOCATE AT 18" A.F.F.
10. ELECTRICAL CONTRACTOR SHALL REINSTALL POS STATION WIRING DUE TO REWORK OF MILLWORK. BWW VENDOR TO SET POS PRIOR TO REOPENING AS COORDINATED BY GC.
11. PROVIDE WEATHERPROOF, GFI PROTECTED RECEPTACLE IN BEER COOLER. CONNECT TO CIRCUIT INDICATED. COORDINATE FINAL LOCATION WITH VENDOR.
12. PROVIDE COMBINATION USB/POWER OUTLETS (PASS & SEYMOUR #TR5362USBBK OR APPROVED EQUAL) RECEPTACLE MOUNTED IN FRONT OF BAR @ 28" FOR GENERAL USE. SEE ARCHITECTURAL ELEVATIONS. CONNECT TO LOCAL CIRCUIT SALVAGED DURING DEMOLITION PHASE WHEN POSSIBLE OR PROVIDE NEW CIRCUIT. COORDINATE LOCATION WITH FURNITURE LAYOUT AND OWNER PRIOR TO ROUGH–IN. DO NOT INSTALL ON CURVED WALL CONSTRUCTION.
13. EXISTING GENERAL LIGHTING AND EMERGENCY LIGHTING IN THIS AREA SHALL REMAIN UNLESS OTHERWISE NOTED. COORDINATE FIELD CONDITIONS WITH NEW LAYOUT AND ADJUST ACCORDINGLY. G.C. SHALL VERIFY LIGHTING IS FULLY OPERATIONAL PRIOR TO SHUTDOWN. RELAMP AS NECESSARY. COORDINATE WITH OWNER.
14. PROVIDE COMBINATION USB/POWER OUTLETS (PASS & SEYMOUR #TR5362USBBK OR APPROVED EQUAL) ABOVE TABLE AT BOOTH. CENTER ON BOOTH AND MOUNT AT 36" AFF. CONNECT TO LOCAL CIRCUIT SALVAGED DURING DEMOLITION PHASE WHEN POSSIBLE OR PROVIDE NEW CIRCUIT. COORDINATE LOCATION WITH FURNITURE LAYOUT AND OWNER PRIOR TO ROUGH–IN.
15. PROVIDE SWITCHED RECEPTACLES SERVING LIQUOR DISPLAY CASE LIGHTING. COORDINATE LOCATION OF RECEPTACLES AND SWITCH WITH OWNER PRIOR TO ROUGH–IN.
16. PROVIDE CIRCUIT FOR UNDER CABINET STRIP LIGHTING. COORDINATE LOCATION OF SWITCH PRIOR TO ROUGH–IN. COORDINATE WITH EXISTING AND NEW MILLWORK
17. LOCATE SWITCH FOR RECEPTACLES SERVING LIQUOR DISPLAY CASE LIGHTING. COORDINATE LOCATION WITH OWNER PRIOR TO ROUGH–IN.
18. RECEPTACLE FOR BUZZTIME TO BE MOUNTED HORIZONTALLY 42" AFF. TO CENTERLINE.
19. RECONNECT EXISTING UNDERCOUNTER LIGHTING FIXTURES TO EXISTING CIRCUITS AFTER INSTALLATION OF NEW COUNTERTOPS.
20. REINSTALL AND RECONNECT EXISTING LIGHT FIXTURES IN SAME OR SIMILAR LOCATION AFTER INSTALLATION OF NEW CEILING GRID. VERIFY QUANTITY AND LOCATIONS IN FIELD.
21. PANEL IS RELOCATED, CIRUITS SHALL REMAIN. ELECTRICAL CONTRACTOR SHALL SURFACE MOUNT AND RELOCATE ALL CONDUIT AND CONDUCTORS TO NEW LOCATION. FIELD VERIFY EXISTING CONDITIONS. SEE SHEET D100 FOR EXISTING LOCATION OF RELOCATED PANEL.

ELECTRICAL CONTRACTOR NOTES

PRIOR TO BID, ELECTRICAL CONTRACTOR (E.C.) SHALL VERIFY ALL FIELD CONDITIONS INCLUDING MAIN SERVICE AND LOCATION OF EXISTING PANELS. E.C SHALL REUSE EXISTING CIRCUITS SERVING AREA BY EXTENDING CONDUIT AND WIRE AS NECESSARY TO LOCATION OF NEW/RELOCATED) POS, TV'S AND EQUIPMENT OR BY PROVIDING NEW CIRCUITS AS REQUIRED. E.C. SHALL PROVIDE TYPE WRITTEN PANEL SCHEDULES UPON COMPLETION OF ALL WORK.

ELECTRICAL SYMBOLS LEGEND

- CONDUIT HOME RUN (PP-1,2,3) — PP = PANEL NAME, 1,2,3 = CIRCUIT NUMBERS
- CONDUIT FILL (GROUND, NEUTRAL, HOT)
- SURFACE MOUNTED PANEL BOARD
- FLUSH MOUNTED PANEL BOARD
- TELEPHONE OUTLET
- DATA OUTLET
- EXIT AND EMERGENCY LIGHT COMBO (BATTERY BACKUP)
- EMERGENCY LIGHT (BATTERY BACKUP)
- REMOTE EMERGENCY LIGHT
- $ TOGGLE WALL SWITCH
- $3 TOGGLE SWITCH – THREE WAY
- $4 TOGGLE SWITCH – FOUR WAY
- K KEYED SWITCH
- * = CODED NOTE NUMBER
- SIMPLEX RECEPTACLE
- DUPLEX RECEPTACLE (ABBREVIATIONS ARE AS FOLLOWS: S – SURGE SUPPRESSION; IG – ISOLATED GROUND; WP – WEATHERPROOF COVER; GFI – GROUND FAULT INTERRUPTER)
- QUAD RECEPTACLE
- SPECIAL DUTY RECEPTACLE (NEMA CONFIGURATION AS NOTED)
- JUNCTION BOX
- PHOTOCELL
- CIRCUIT BREAKER
- DUPLEX RECEPTACLE/COMMUNICATION JACK (ELEVATIONS)
- QUAD RECEPTACLE/COMMUNICATION JACK (ELEVATIONS)
- DUPLEX RECEPTACLE (ELEVATIONS)
- SINGLE POLE RECEPTACLE (ELEVATIONS)
- SPECIAL RECEPTACLE (ELEVATIONS)

Intertech Design Services, Inc.
Architecture and Engineering
9675 Montgomery Rd.
Cincinnati, Ohio 45242
Phone: (513) 791-8888
Fax: (513) 792-7923
Web: www.intertechdesign.net

INTERTECH DESIGN SERVICES, INC. HAS EXERCISED REASONABLE SKILL AND JUDGMENT IN PROVIDING PROFESSIONAL SERVICES. INTERTECH DESIGN SERVICES, INC. IS NOT A GUARANTOR OF THE PROJECT TO WHICH ITS SERVICES ARE DIRECTED, AND ITS RESPONSIBILITY IS LIMITED TO WORK SPECIFICALLY PERFORMED FOR THE CLIENT, OWNERS OF THE CLIENT, NOR THIRD PARTIES NOT UNDER THE DIRECT CONTROL OF INTERTECH DESIGN SERVICES, INC.

THIS DOCUMENT, AND THE IDEAS AND DESIGNS INCORPORATED HEREIN, AS AN INSTRUMENT OF PROFESSIONAL SERVICE, IS THE PROPERTY OF INTERTECH DESIGN SERVICES, INC. AND IS NOT TO BE USED, IN WHOLE OR IN PART, FOR ANY OTHER PROJECT, WITHOUT THE WRITTEN AUTHORIZATION OF INTERTECH DESIGN SERVICES, INC. © COPYRIGHT INTERTECH DESIGN SERVICES, INC., ALL RIGHTS RESERVED.

© COPYRIGHT INTERTECH DESIGN SERVICES, INC. 2015

BUFFALO WILD WINGS

CORPORATE – IN-LINE
TOWNE SOUTH PLAZA
3718 US HWY 41
TERRE HAUTE, IN 47802

DRAWING ISSUE

NO	DESCRIPTION	DATE
	70% CLIENT CHECKSET	11/25/15
	BID AND PERMIT	12/22/15

STAMP

12.22.2015

POWER + LIGHTING PLAN

SCALE: 1/4" = 1'-0"

Drawn By SAC Checked SJW

PROJECT NUMBER
15-0124

SHEET NUMBER
E100

ORIGINAL PRINT SIZE – 30 X 42

PANEL: DP (EXISTING) — BUFFALO WILD WINGS, TERRA HAUTE,IN — 120/208V, 3PH, 4W; 800 AMP MCB; 800A BUSS; 42,000 AIC; GROUND BAR; SERVICE ENTRANCE
SERVES: BW-3 RESTAURANT
LOCATION: NEAR REAR ENTRANCE DOOR
SURFACE MOUNT — LOAD IN KVA PER PHASE

CKT	DESCRIPTION	#	BKR	PL	A		B		C		PL	BKR	#	DESCRIPTION	CKT
1	PANEL KP		200	3	20.76	14.48					3	100		PANEL P1	2
3	"						20.76	14.48						"	4
5	"								20.76	14.48				"	6
7	PANEL P2		200	3	16.24	16.56					3	150		RTU-2	8
9	"						16.24	16.56						"	10
11	"								16.24	16.56				"	12
13	RTU-1		100	3	10.92	10.68					3	100		RTU-3	14
15	"						10.92	10.68						"	16
17	"								10.92	10.68				"	18
19	RTU-4		60	3	6.24	0.00								SPACE	20
21	"						6.24	0.00						SPACE	22
23	"								6.24	0.00				SPACE	24
25	SPACE				0.00	0.00								SPACE	26
27	SPACE						0.00	0.00						SPACE	28
29	SPACE								0.00	0.00				SPACE	30
31	SPACE				0.00	0.00								SPACE	32
33	SPACE						0.00	0.00						SPACE	34
35	SPACE								0.00	0.00				SPACE	36
37	SPACE				0.00	0.00								SPACE	38
39	RESTROOM SIGNAGE		20	1			0.36	0.00						SPACE	40
41	TV'S – PATIO	IG	20	1					0.94	0.36	1	20		BAR STEP LIGHTING	42

TOTAL PER PHASE: 96.12 | 96.48 | 97.42 KVA; 800.37 | 803.37 | 811.19 AMPS
TOTAL CONNECTED LOAD: 290.01 KVA; 804.98 AMPS
FEEDER DEMAND LOAD: 273.32 KVA; 758.67 AMPS

CIRCUIT NUMBERS SHOWN ONLY FOR CLARIFICATIONS

PANEL EXISTING
PROVIDE SWITCHING DUTY CIRCUIT BREAKERS FOR ALL LIGHTING CIRCUITS
PROVIDE HACR CIRCUIT BREAKERS FOR HVAC AND REFRIGERATION EQUIPMENT
(GF) = GROUND FAULT INTERRUPTER
(ST) = SHUNT TRIP, (LO) = LOCKOUT, (IG) = ISOLATED GROUND

PANEL: KP (EXISTING) — BUFFALO WILD WINGS, TERRA HAUTE,IN — 120/208V, 3PH, 4W; 225 AMP MLO; 10,000 AIC **; GROUND BAR
SERVES: KITCHEN
LOCATION: KITCHEN
FLUSH MOUNT — LOAD IN KVA PER PHASE

CKT	DESCRIPTION	#	BKR	PL	A		B		C		PL	BKR	#	DESCRIPTION	CKT
1	KITCHEN HOOD (EF-1, S-1)		30	3	2.04	2.61					2	15		(21)STEAMER	2
3	"						2.04	0.73						"	4
5	"								2.04	0.96	1	20		(22)COOKER WARMER	6
7	KITCHN HOOD CONTROL CKT		15	1	0.12	1.11					2	20		MICROWAVE	8
9	BACK FREEZER		20	1			0.00	1.11							10
11	(19)FRYERS	ST	20	1					1.92	3.62	2	50		DISHWASHER	12
13	SPACE FOR SHUNT TRIP				0.00	3.62									14
15	HOOD LIGHTS/CHIP FREEZER		15	1			1.00	0.90			1	20		(30)2-DRAWER WARMER	16
17	CARBONATOR	LO	20	1					0.60	1.32	2	20		SPARE	18
19	(33)BREAD OVEN		50	3	3.79	1.32								"	20
21	"						3.79	1.62			1	20		(25B)REFRIG. (59)SODA A&B	22
23	"								3.79	1.11	2	15		(28)MICROWAVE	24
25	(50)COFFEE MACHINE		20	1	1.92	1.11								"	26
27	(25)CHIP FREEZER		20	2			0.00	1.11			2	15		(28)MICROWAVE	28
29	(60)CARBONTR, (32)SLICER								1.16	1.11				"	30
31	(61) FREEZER		20	1	1.38	1.40					2	20		(29)CONVEYOR TOASTER	32
33	MICROWAVE		20	2			1.11	1.40						"	34
35									1.11	1.11	2	20		MICROWAVE	36
37	(94)WASH/DRYER STACKED		30	2	2.60	1.11								"	38
39	"						2.60	0.00						SPACE	40
41	SPARE		20	1					0.00	0.90	1	20		FREEZER	42

TOTAL PER PHASE: 24.12 | 17.41 | 20.75 KVA; 200.87 | 144.95 | 172.76 AMPS
TOTAL CONNECTED LOAD: 62.28 KVA; 172.86 AMPS
FEEDER DEMAND LOAD: 48.18 KVA; 133.74 AMPS

** BRANCH BREAKERS TO SERIES RATE WITH UPSTREAM BREAKER
PANEL EXISTING
PROVIDE SWITCHING DUTY CIRCUIT BREAKERS FOR ALL LIGHTING CIRCUITS
PROVIDE HACR CIRCUIT BREAKERS FOR HVAC AND REFRIGERATION EQUIPMENT
(GF) = GROUND FAULT INTERRUPTER
(ST) = SHUNT TRIP, (LO) = LOCKOUT, (IG) = ISOLATED GROUND

PANEL: P1 (EXISTING) — BUFFALO WILD WINGS, TERRA HAUTE,IN — 120/208V, 3PH, 4W; 100 AMP MLO; 10,000 AIC **; GROUND BAR
SERVES: GENERAL POWER & LIGHTING
LOCATION: NEAR REAR DOOR
SURFACE MOUNT — LOAD IN KVA PER PHASE

CKT	DESCRIPTION	#	BKR	PL	A		B		C		PL	BKR	#	DESCRIPTION	CKT
1	(17) BACK BAR COOLER		20	1	1.08	1.59					3	30		(1)BEER COOLER COND.	2
3	FIRE ALARM		20	1			0.60	1.59						"	4
5	(74)COIN,(75)JB,(76)VID GM		20	1					1.80	1.59				"	6
7	(76)VIDEO (77)DART(96)SBD		20	1	1.32	0.86					1	15		SPARE	8
9	(2)WALK-IN MEAT COND.		15	3			1.07	0.60			1	20		FREEZER/DRAIN FREEZER	10
11	"								1.07	1.52	1	20		(10)GL CHILLR,(12)UC REF	12
13	"				0.98	0.36					1	20		NTN	14
15	(2)WALK-IN MEAT EVAP.		15	2			0.96	0.00			1	20		SPARE	16
17	"								0.96	0.16	1	20		SPARE	18
19	(4)PRODUCE COOLER COND.		20	2	1.56	1.32					1	20		(14)GL W.(15)BAR BLENDR	20
21	"						1.56	0.60			1	20		SPARE	22
23	(4)PRODUCE COOLER EVAP		15	1					0.50	0.53	1	15		EF-2	24
25	(3)CHICKEN COOLER COND.		20	3	1.67	1.50					1	20		WUH-1	26
27	"						1.67	0.50			1	20		WUH-2	28
29	"								1.67	1.18	1	20		COMPRESSOR	30
31	(3)CHICKEN COOLER EVAP.		15	2	0.73	0.60					1	20		CIG MACH/HW HEATER	32
33	"						0.73	0.50			1	20		FIRE ALARM/SECURITY SYS.	34
35	RTU'S MAINT. RECPTS, LTS		20	1					1.02	0.50	1	20		TELEPHONE EQUIPMENT	36
37	SPARE		20	1	0.60	1.20					1	20		NEON SIGNAGE, BILLIARDS	38
39	KITCHEN ICE MACHINE		20	2			1.32	0.86			1	20		(60)CARBNTR,(87)COMPRSR	40
41	"								1.32	1.69	1	20		(87) PERLICK REFRIG	42

TOTAL PER PHASE: 15.37 | 12.56 | 15.50 KVA; 127.96 | 104.61 | 129.09 AMPS
TOTAL CONNECTED LOAD: 43.43 KVA; 120.55 AMPS
FEEDER DEMAND LOAD: 30.20 KVA; 83.83 AMPS

** BRANCH BREAKERS TO SERIES RATE WITH UPSTREAM BREAKER
PANEL EXISTING
PROVIDE SWITCHING DUTY CIRCUIT BREAKERS FOR ALL LIGHTING CIRCUITS
PROVIDE HACR CIRCUIT BREAKERS FOR HVAC AND REFRIGERATION EQUIPMENT
(GF) = GROUND FAULT INTERRUPTER
(ST) = SHUNT TRIP, (LO) = LOCKOUT, (IG) = ISOLATED GROUND

PANEL: P2 (EXISTING) — BUFFALO WILD WINGS, TERRA HAUTE,IN — 120/208V, 3PH, 4W; 225 AMP MLO; 10,000 AIC **; GROUND BAR; ISOLATED GROUND
SERVES: GENERAL POWER & LIGHTING
LOCATION: FOOD SERVICE
FLUSH MOUNT — LOAD IN KVA PER PHASE

CKT	DESCRIPTION	#	BKR	PL	A		B		C		PL	BKR	#	DESCRIPTION	CKT
1	(80)TV'S,(81)PROJ. TV'S		20	1	1.57	1.43					1	20		LTS – DIM-1,DIM-2	2
3	LIGHTS – SIGNAGE		20	1			1.20	0.90			1	20		LTS – DIM-3	4
5	RECPS RM 103,108,115,(86)		20	1					1.44	1.05	1	20		LTS – DIM-4	6
7	RECPS KITCHEN A,B		20	1	1.44	1.65					1	20		LTS – DIM-5	8
9	LTS-DIM-12,UNDERCNTR LTS		20	1			0.85	1.20			1	20		LTS – DIM-6,DIM-7	10
11	LIGHTS – SIGNAGE		20	1					1.20	1.20	1	20		LTS – DIM-8	12
13	LIGHTS – SIGNAGE		20	1	1.20	1.80					1	20		LTS – DIM-9	14
15	LTS-DIM-13		20	1			1.20	1.65			1	20		LTS – DIM-10,DIM-11,DIM-16	16
17	LTS-DIM-14, BACK BAR LTS		20	1					1.20	0.18	1	20	IG	(53)PRINTER	18
19	LTS-DIM-15		20	1	1.80	0.36					1	20		FRONT WALL WINDOW RECP	20
21	(80)TV'S,(81)PROJ. TV'S		20	1			1.19	0.36			1	20		FRONT WALL WINDOW RECP	22
23	RESTROOMS		20	1					1.11	0.36	1	20		FRONT WALL WINDOW RECP	24
25	LTS-OFFICE, FOOD SERVICE		20	1	0.56	0.60					1	20		TV EQUIPMENT	26
27	LTS-KITCHEN,EMPLOYEE RR		20	1			1.68	0.90			1	20	IG	OFFICE EQUIPMENT	28
29	LTS-COOLERS		20	1					1.00	1.62	1	20	IG	OFFICE EQUIPMENT	30
31	HAND DRYER MENS		25	1	3.00	0.36					1	20		FOOD SERVICE	32
33	HAND DRYER WOMENS		25	1			3.00	0.36			1	20		FOOD SERVICE	34
35	BAR DISHWASHER/AS BAR		20	1					0.48	1.44	1	20	IG	BACK BAR REGISTER	36
37	SATELLITE TV EQUIPMENT	IG	20	1	1.11	0.38					1	20	IG	TV EQUIPMENT	38
39	NIGHT, EXIT, EMRG. LIGHTS	LO	20	1			1.65	1.38			1	20	IG	(80) (81) TV'S	40
41	NIGHT, EXIT, EMRG. LIGHTS	LO	20	1					1.27	1.11	1	20	LO	SATELLITE TV EQUIPMENT IG	42

TOTAL PER PHASE: 17.26 | 17.52 | 14.66 KVA; 143.74 | 145.88 | 122.08 AMPS
TOTAL CONNECTED LOAD: 49.44 KVA; 137.23 AMPS
FEEDER DEMAND LOAD: 59.85 KVA; 166.12 AMPS

** BRANCH BREAKERS TO SERIES RATE WITH UPSTREAM BREAKER
PANEL EXISTING
PROVIDE SWITCHING DUTY CIRCUIT BREAKERS FOR ALL LIGHTING CIRCUITS
PROVIDE HACR CIRCUIT BREAKERS FOR HVAC AND REFRIGERATION EQUIPMENT
(GF) = GROUND FAULT INTERRUPTER
(ST) = SHUNT TRIP, (LO) = LOCKOUT, (IG) = ISOLATED GROUND

01 EXISTING PANELS
SCALE: NONE

(ELECTRICAL CONTRACTOR SHALL FIELD VERIFY AVAILABILITY OF ALL EXISTING SPACES AND SPARES IN ALL EXISTING PANELS PRIOR TO BID)

PANEL: DP (REVISED) — BUFFALO WILD WINGS, TERRA HAUTE,IN — 120/208V, 3PH, 4W; 800 AMP MCB; 800A BUSS; 42,000 AIC; GROUND BAR; SERVICE ENTRANCE
SERVES: BW-3 RESTAURANT
LOCATION: NEAR REAR ENTRANCE DOOR
SURFACE MOUNT — LOAD IN KVA PER PHASE

CKT	DESCRIPTION	#	BKR	PL	A		B		C		PL	BKR	#	DESCRIPTION	CKT
1	**PANEL KP**		200	3	**17.75**	**15.41**					3	100		**PANEL P1**	2
3	"						**17.75**	**15.41**						"	4
5	"								**17.75**	**15.41**				"	6
7	**PANEL P2**		200	3	**16.94**	16.56					3	150		RTU-2	8
9	"						**16.94**	16.56						"	10
11	"								**16.94**	16.56				"	12
13	RTU-1		100	3	10.92	10.68					3	100		RTU-3	14
15	"						10.92	10.68						"	16
17	"								10.92	10.68				"	18
19	RTU-4		60	3	6.24	**5.00**					**3**	**60**		**DISHMACHINE**	20
21	"						6.24	**5.00**						**"**	22
23	"								6.24	**5.00**				**"**	24
25	SPACE				0.00	1.00					**3**	**80**		**EXPO UNIT**	26
27	SPACE						0.00	1.00						**"**	28
29	SPACE								0.00	1.00				**"**	30
31	SPACE				0.00	0.00								SPACE	32
33	SPACE						0.00	0.00						SPACE	34
35	**EXTERIOR LIGHTS**		**20**	**1**					**0.10**	**1.20**	**1**	**20**	**IG**	**TV'S - DINING 'B'**	36
37	**TV'S - DINING 'A'**	**IG**	**20**	**1**	**0.90**	**1.50**					**1**	**20**	**IG**	**TV'S - DINING 'A'**	38
39	**RESTROOM SIGNAGE**		20	1			**0.36**	**1.80**			**1**	**20**		**HOSTESS/GEN RECEPTS**	40
41	TV'S – PATIO	IG	20	1					0.94	**0.36**	1	20		**LIQUOR DISPLAY**	42

TOTAL PER PHASE: **102.90** | **102.66** | **103.09** KVA; **856.83** | **854.83** | **858.46** AMPS
TOTAL CONNECTED LOAD: **308.64** KVA; **856.70** AMPS
FEEDER DEMAND LOAD: **287.42** KVA; **797.81** AMPS

CIRCUIT NUMBERS SHOWN ONLY FOR CLARIFICATIONS

PANEL EXISTING
PROVIDE SWITCHING DUTY CIRCUIT BREAKERS FOR ALL LIGHTING CIRCUITS
PROVIDE HACR CIRCUIT BREAKERS FOR HVAC AND REFRIGERATION EQUIPMENT
(GF) = GROUND FAULT INTERRUPTER
(ST) = SHUNT TRIP, (LO) = LOCKOUT, (IG) = ISOLATED GROUND

PANEL: KP (REVISED) — BUFFALO WILD WINGS, TERRA HAUTE,IN — 120/208V, 3PH, 4W; 225 AMP MLO; 10,000 AIC **; GROUND BAR
SERVES: KITCHEN
LOCATION: KITCHEN
FLUSH MOUNT — LOAD IN KVA PER PHASE

CKT	DESCRIPTION	#	BKR	PL	A		B		C		PL	BKR	#	DESCRIPTION	CKT
1	KITCHEN HOOD (EF-1, S-1)		30	3	2.04	2.61					2	15		(21)STEAMER	2
3	"						2.04	0.73						"	4
5	"								2.04	**0.96**	1	20		**(22)COOKER WARMER**	6
7	KITCHN HOOD CONTROL CKT		15	1	0.12	1.11					2	20		MICROWAVE	8
9	BACK FREEZER		20	1			0.00	1.11							10
11	(19)FRYERS	ST	20	1					1.92	**0.00**	2	50		**SPARE**	12
13	SPACE FOR SHUNT TRIP				0.00	**0.00**									14
15	HOOD LIGHTS/CHIP FREEZER		15	1			1.00	**0.90**			1	20		**(30)2-DRAWER WARMER**	16
17	CARBONATOR	LO	20	1					0.60	1.32	2	20		SPARE	18
19	**(33)BREAD OVEN**		50	3	**3.19**	1.32								"	20
21	"						**3.19**	**1.62**			1	20		**(25B)REFRIG. (59)SODA A+B**	22
23	"								**3.19**	**1.11**	2	15		**(28)MICROWAVE**	24
25	**TEA/COFFEE MACHINE**		20	1	**1.92**	**1.11**								"	26
27	(25)CHIP FREEZER		20	2			0.00	**1.11**			2	15		**(28)MICROWAVE**	28
29	(60)CARBONTR, (32)SLICER								1.16	**1.11**				"	30
31	(61) FREEZER		20	1	1.38	1.40					2	20		(29)CONVEYOR TOASTER	32
33	MICROWAVE		20	2			1.11	1.40						"	34
35									1.11	1.11	2	20		MICROWAVE	36
37	(94)WASH/DRYER STACKED		30	2	2.60	1.11								"	38
39	"						2.60	0.00						SPACE	40
41	**HEAT LAMP**		20	1					**1.87**	**0.90**	1	20		**FREEZER**	42

TOTAL PER PHASE: **19.90** | **16.81** | **18.40** KVA; **165.73** | **139.95** | **153.21** AMPS
TOTAL CONNECTED LOAD: **55.11** KVA; **152.96** AMPS
FEEDER DEMAND LOAD: **41.29** KVA; **114.61** AMPS

** BRANCH BREAKERS TO SERIES RATE WITH UPSTREAM BREAKER
PANEL EXISTING
PROVIDE SWITCHING DUTY CIRCUIT BREAKERS FOR ALL LIGHTING CIRCUITS
PROVIDE HACR CIRCUIT BREAKERS FOR HVAC AND REFRIGERATION EQUIPMENT
(GF) = GROUND FAULT INTERRUPTER
(ST) = SHUNT TRIP, (LO) = LOCKOUT, (IG) = ISOLATED GROUND

PANEL: P1 (REVISED) — BUFFALO WILD WINGS, TERRA HAUTE,IN — 120/208V, 3PH, 4W; 100 AMP MLO; 10,000 AIC **; GROUND BAR
SERVES: GENERAL POWER & LIGHTING
LOCATION: NEAR REAR DOOR
SURFACE MOUNT — LOAD IN KVA PER PHASE

CKT	DESCRIPTION	#	BKR	PL	A		B		C		PL	BKR	#	DESCRIPTION	CKT
1	(17) BACK BAR COOLER		20	1	1.08	1.59					3	30		(1)BEER COOLER COND.	2
3	FIRE ALARM		20	1			0.60	1.59						"	4
5	**(74)COIN,(75)JB,(76)VID GM**		20	1					**1.80**	1.59				"	6
7	(76)VIDEO (77)DART(96)SBD		20	1	1.32	1.06					1	15		**UNDERCOUNTER LIGHTS**	8
9	(2)WALK-IN MEAT COND.		15	3			1.07	0.60			1	20		FREEZER/DRAIN FREEZER	10
11	"								1.07	1.52	1	20		(10)GL CHILLR,(12)UC REF	12
13	"				0.98	**0.36**					1	20		**NTN/BUZZTIME**	14
15	(2)WALK-IN MEAT EVAP.		15	2			0.96	**1.26**			1	20		**CUST. USE BAR RECEPTS**	16
17	"								0.96	**1.08**	1	20		**BOOTH RECEPTS**	18
19	(4)PRODUCE COOLER COND.		20	2	1.56	1.32					1	20		(14)GL W.(15)BAR BLENDR	20
21	"						1.56	**1.44**			1	20		**BOOTH RECEPTS**	22
23	(4)PRODUCE COOLER EVAP		15	1					0.50	0.53	1	15		EF-2	24
25	(3)CHICKEN COOLER COND.		20	3	1.67	1.50					1	20		WUH-1	26
27	"						1.67	0.50			1	20		WUH-2	28
29	"								1.67	1.18	1	20		COMPRESSOR	30
31	(3)CHICKEN COOLER EVAP.		15	2	0.73	0.60					1	20		CIG MACH/HW HEATER	32
33	"						0.73	0.50			1	20		FIRE ALARM/SECURITY SYS.	34
35	RTU'S MAINT. RECPTS, LTS		20	1					1.02	0.50	1	20		TELEPHONE EQUIPMENT	36
37	**BEER COOLER RECEPT**		20	1	**0.18**	1.20					1	20		NEON SIGNAGE, BILLIARDS	38
39	**KITCHEN ICE MACHINE**		20	2			**1.32**	0.86			1	20		(60)CARBNTR,(87)COMPRSR	40
41	"								**1.32**	1.69	1	20		(87) PERLICK REFRIG	42

TOTAL PER PHASE: **15.15** | **14.66** | **16.43** KVA; **126.13** | **122.09** | **136.78** AMPS
TOTAL CONNECTED LOAD: **46.24** KVA; **128.34** AMPS
FEEDER DEMAND LOAD: **33.32** KVA; **92.49** AMPS

** BRANCH BREAKERS TO SERIES RATE WITH UPSTREAM BREAKER
PANEL EXISTING
PROVIDE SWITCHING DUTY CIRCUIT BREAKERS FOR ALL LIGHTING CIRCUITS
PROVIDE HACR CIRCUIT BREAKERS FOR HVAC AND REFRIGERATION EQUIPMENT
(GF) = GROUND FAULT INTERRUPTER
(ST) = SHUNT TRIP, (LO) = LOCKOUT, (IG) = ISOLATED GROUND

PANEL: P2 (REVISED) — BUFFALO WILD WINGS, TERRA HAUTE,IN — 120/208V, 3PH, 4W; 225 AMP MLO; 10,000 AIC **; GROUND BAR; ISOLATED GROUND
SERVES: GENERAL POWER & LIGHTING
LOCATION: FOOD SERVICE
FLUSH MOUNT — LOAD IN KVA PER PHASE

CKT	DESCRIPTION	#	BKR	PL	A		B		C		PL	BKR	#	DESCRIPTION	CKT
1	**TV'S - DINING 'C'**		20	1	**1.05**	1.43					1	20		LTS – DIM-1,DIM-2	2
3	LIGHTS – SIGNAGE		20	1			1.20	0.90			1	20		LTS – DIM-3	4
5	RECPS RM 103,108,115,(86)		20	1					1.44	1.05	1	20		LTS – DIM-4	6
7	RECPS KITCHEN A,B		20	1	1.44	1.65					1	20		LTS – DIM-5	8
9	LTS-DIM-12,UNDERCNTR LTS		20	1			0.85	1.20			1	20		LTS – DIM-6,DIM-7	10
11	**LIGHTS - SIGNAGE**		20	1					**1.20**	1.20	1	20		LTS – DIM-8	12
13	**LIGHTS - SIGNAGE**		20	1	**1.20**	1.80					1	20		LTS – DIM-9	14
15	LTS-DIM-13		20	1			1.20	1.65			1	20		LTS – DIM-10,DIM-11,DIM-16	16
17	LTS-DIM-14, BACK BAR LTS		20	1					1.20	0.18	1	20	IG	(53)PRINTER	18
19	LTS-DIM-15		20	1	1.80	0.36					1	20		FRONT WALL WINDOW RECP	20
21	**TV'S - DINING 'B'**		20	1			**1.45**	0.36			1	20		FRONT WALL WINDOW RECP	22
23	RESTROOMS		20	1					1.11	0.36	1	20		FRONT WALL WINDOW RECP	24
25	LTS-OFFICE, FOOD SERVICE		20	1	0.56	**1.15**					1	20		**TV'S - DINING 'A'**	26
27	LTS-KITCHEN,EMPLOYEE RR		20	1			1.68	0.90			1	20	IG	OFFICE EQUIPMENT	28
29	LTS-COOLERS		20	1					1.00	1.62	1	20	IG	OFFICE EQUIPMENT	30
31	HAND DRYER MENS		25	1	3.00	**0.36**					1	20		**ORDERING P.O.S.**	32
33	HAND DRYER WOMENS		25	1			3.00	**0.36**			1	20		**ORDERING P.O.S.**	34
35	BAR DISHWASHER/AS BAR		20	1					0.48	**1.44**	1	20	IG	**DINING/BAR P.O.S.**	36
37	**SATELLITE TV EQUIPMENT**	IG	20	1	**1.11**	**1.50**					1	20	IG	**TV'S/PROJ - BAR**	38
39	NIGHT, EXIT, EMRG. LIGHTS	LO	20	1			1.65	**1.35**			1	20	IG	**TV'S - DINING 'B'**	40
41	NIGHT, EXIT, EMRG. LIGHTS	LO	20	1					1.27	**1.11**	1	20	LO	**SATELLITE TV EQUIPMENT IG**	42

TOTAL PER PHASE: **18.41** | **17.75** | **14.66** KVA; **153.26** | **147.81** | **122.08** AMPS
TOTAL CONNECTED LOAD: **50.82** KVA; **141.05** AMPS
FEEDER DEMAND LOAD: **61.57** KVA; **170.89** AMPS

** BRANCH BREAKERS TO SERIES RATE WITH UPSTREAM BREAKER
PANEL EXISTING
PROVIDE SWITCHING DUTY CIRCUIT BREAKERS FOR ALL LIGHTING CIRCUITS
PROVIDE HACR CIRCUIT BREAKERS FOR HVAC AND REFRIGERATION EQUIPMENT
(GF) = GROUND FAULT INTERRUPTER
(ST) = SHUNT TRIP, (LO) = LOCKOUT, (IG) = ISOLATED GROUND

02 REVISED PANELS
SCALE: NONE

LIGHT FIXTURE SCHEDULE

TYPE	DESCRIPTION	FURNISHED BY	INSTALLED BY	MANUFACTURER	MODEL #	MOUNTING	LAMPS	FIXTURE VA	VOLTS	BALLAST	REMARKS
A1	OUTDOOR FLUORESCENT SIGN FIXTURE	OWNER'S VENDOR	ELEC CONTR	COLUMBIA OR EQUIVALENT BY ELLIPTIPAR	SLA4-132-SLBB-2	END ARM MOUNT	(1) F32T8/SP41/ECO	32	120		NOTE #3, PROVIDE WITH BLACK FINISH.
SD1	UNDERCOUNTER L.E.D. TAPE WITH POWER SUPPLY AND RETROFIT CHANNEL.	ELEC CONTR	ELEC CONTR	TOKISTAR	TLP-50/TLED-IW-UB /WP-L02C / RC-S	SURFACE	0.40w L.E.D.'s AT 2.0"O.C.-3000°K.	-	120	-	L.E.D. TAPE FIELD CUT TO LENGTHS SHOWN. PROVIDE ALL MOUNTING CLIPS AND 60W REMOTE POWER SUPPLY OF EACH LOCATION MOUNTED WITH MANUFACTURER. LIN CABINET ABOVE. COORDINATE ALL PARTS

GENERAL NOTES:
1. ALL FIXTURES IN THE BAR AND FOOD PREP AREAS SHALL HAVE SHATTER-RESISTANT LENSES.
2. REFER TO ARCHITECTURAL DRAWINGS FOR ADDITIONAL INFORMATION INCLUDING MOUNTING HEIGHTS.
3. NO SUBSTITUTIONS FOR FRONT OF HOUSE FIXTURES.

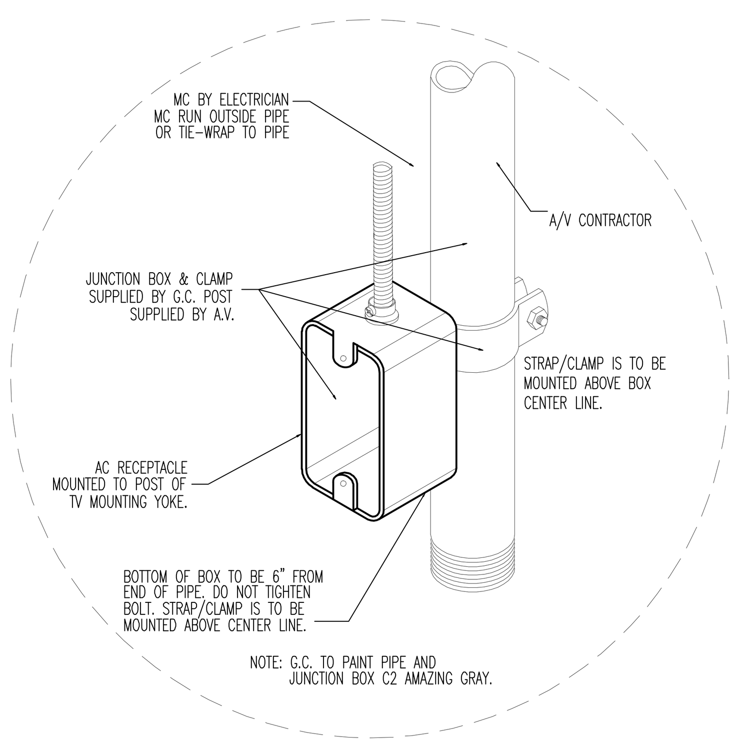

03 A/C RECEPT FOR POLE MOUNTED TV'S
SCALE: NONE

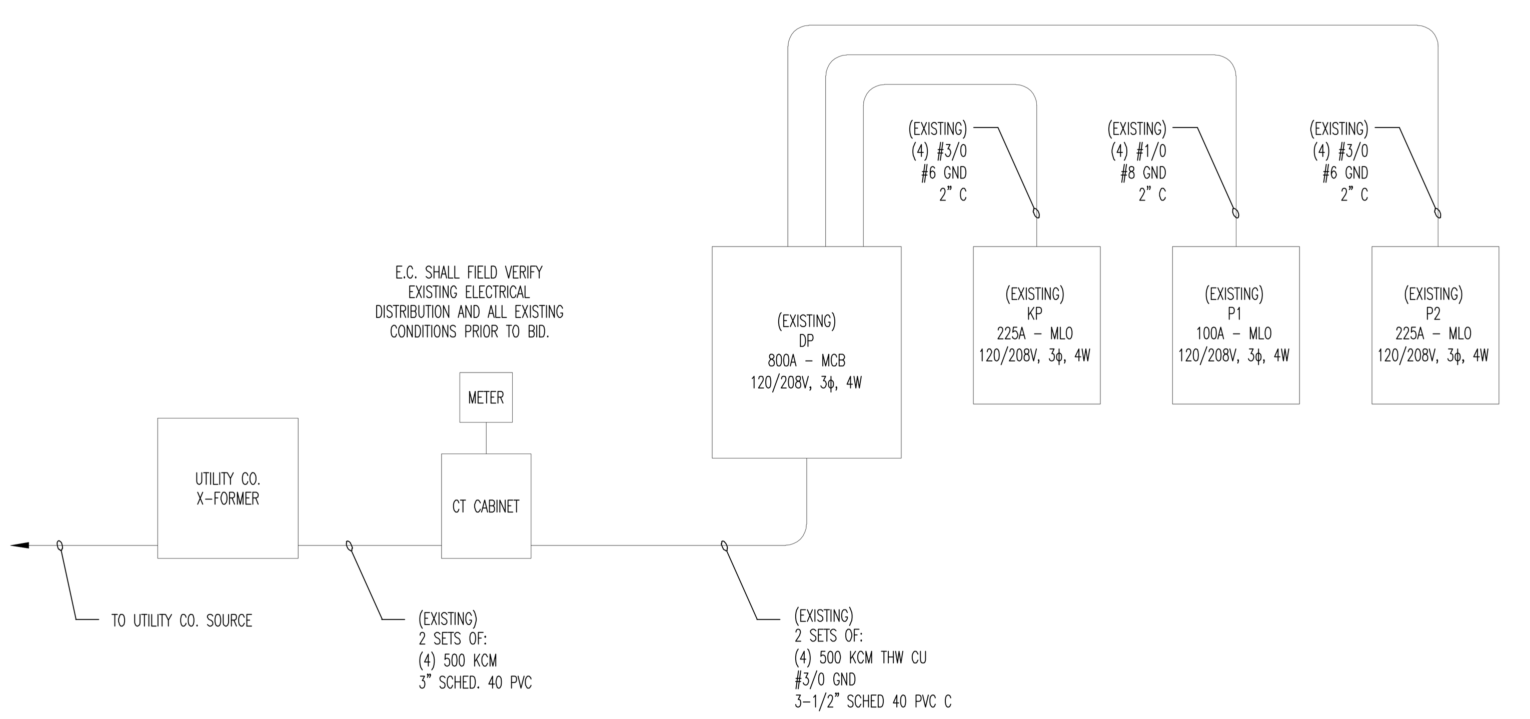

04 ONE-LINE RISER DIAGRAM
SCALE: NONE

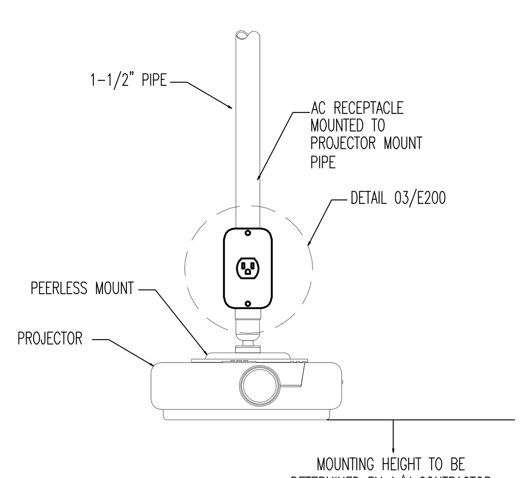

05 PROJECTOR MOUNTING
SCALE: NONE

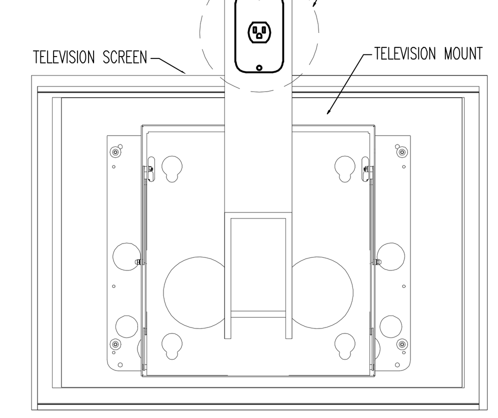

06 A/C RECEPT FOR TV'S
SCALE: NONE

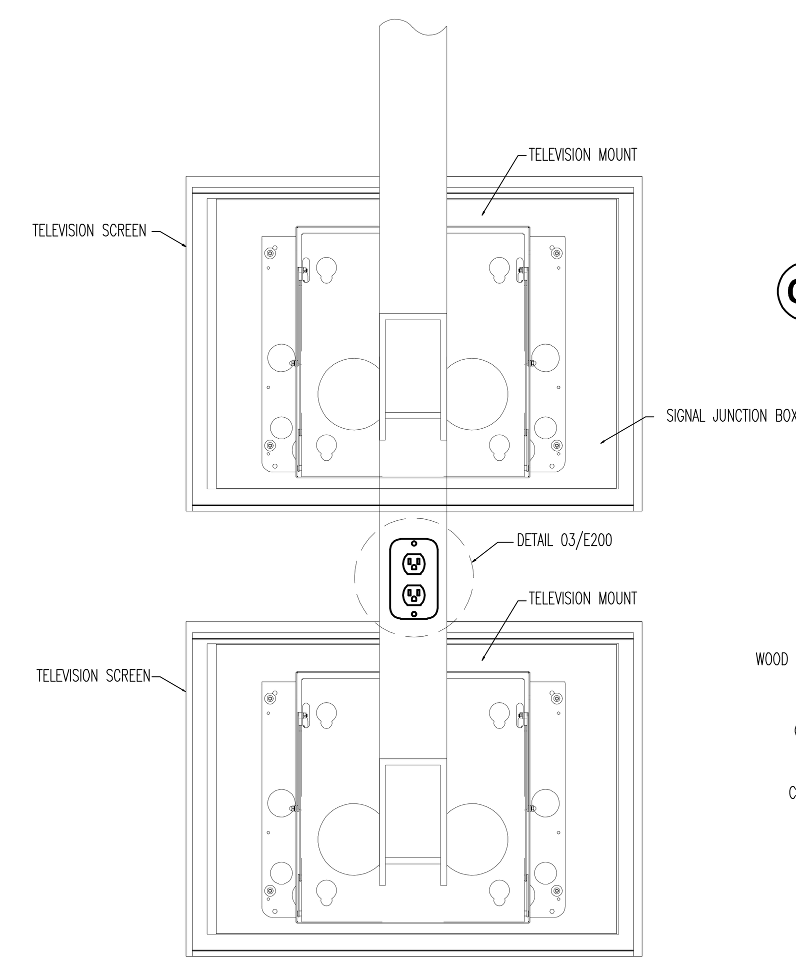

07 DOUBLE STACK TV'S
SCALE: NONE

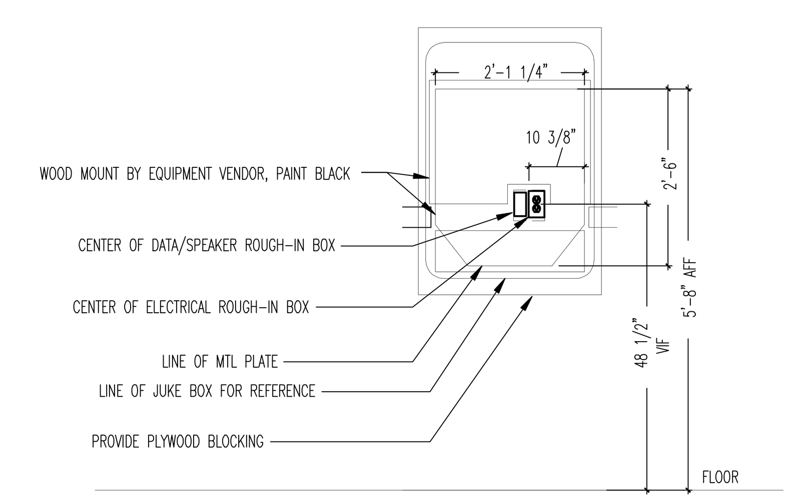

08 JUKE BOX ELEVATION
SCALE: NONE

Intertech Design Services, Inc.
Architecture and Engineering
9675 Montgomery Rd.
Cincinnati, Ohio 45242
Phone: (513) 791-5588
Fax: (513) 792-7923
Web: www.intertechdesign.net

INTERTECH DESIGN SERVICES, INC. HAS EXERCISED REASONABLE SKILL AND JUDGMENT IN PROVIDING PROFESSIONAL SERVICES. INTERTECH DESIGN SERVICES, INC. IS NOT A GUARANTOR OF THE PROJECT TO WHICH ITS SERVICES ARE DIRECTED, AND ITS RESPONSIBILITY IS LIMITED TO WORK SPECIFICALLY PERFORMED FOR THE CLIENT. OMISSIONS OF THE CLIENT, NOR THIRD PARTIES NOT UNDER THE DIRECT CONTROL OF INTERTECH DESIGN SERVICES, INC..

THIS DOCUMENT, AND THE IDEAS AND DESIGNS INCORPORATED HEREIN, AS AN INSTRUMENT OF PROFESSIONAL SERVICE, IS THE PROPERTY OF INTERTECH DESIGN SERVICES, INC. AND IS NOT TO BE USED, IN WHOLE OR IN PART, FOR ANY OTHER PROJECT, WITHOUT THE WRITTEN AUTHORIZATION OF INTERTECH DESIGN SERVICES, INC. COPYRIGHT 2015: INTERTECH DESIGN SERVICES, INC. ALL RIGHTS RESERVED.

© COPYRIGHT INTERTECH DESIGN SERVICES, INC. 2015

BUFFALO WILD WINGS
CORPORATE - IN-LINE
TOWNE SOUTH PLAZA
3718 US HWY 41
TERRE HAUTE, IN 47802

DRAWING ISSUE

NO	DESCRIPTION	DATE
	70% CLIENT CHECKSET	11/25/15
	BID AND PERMIT	12/22/15

STAMP

12.22.2015

ELECTRICAL SCHEDULES + DETAILS
SCALE: AS NOTED
Drawn By SAC — Checked SJV

PROJECT NUMBER
15-0124

SHEET NUMBER
E200

ORIGINAL PRINT SIZE - 30 X 42